WILO (U.K.) Ltd
Second Avenue
UK DE14 2WJ Staffordshire, United Kingdom
Phone
Fax

TOP-STG 25/7 3~ PN 10

System: Standard pump

wilo

Customer	Project	Page 1 / 1
Customer no.	Project no.	
Contact	Position no.	Date 2013-12-04
Care of	Location	

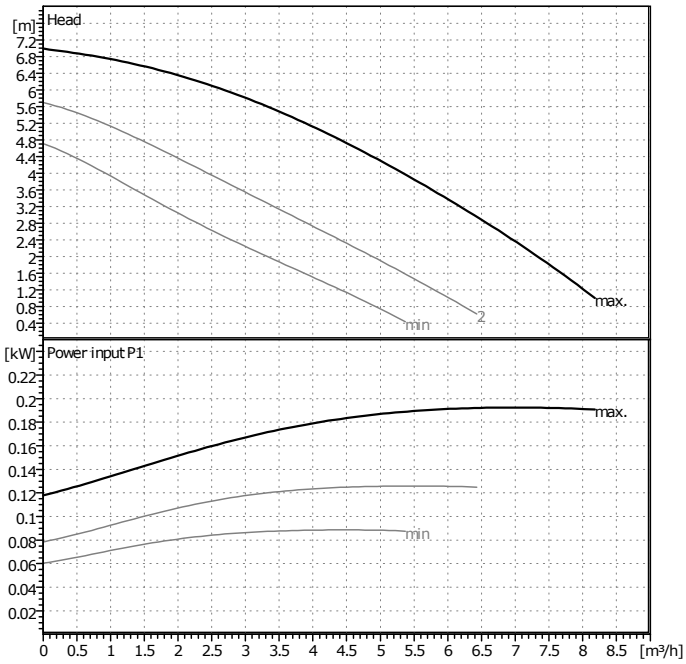

Requested data

Flow	0	m³/h
Head	0	m
Fluid	Water, pure	
Fluid temperature	20	°C
Density	0.9983	kg/dm³
Kinematic viscosity	1.005	mm²/s
Vapor pressure	0.02337	bar

Pump data

Make	WILO	
Type	TOP-STG 25/7 3~ PN 10	
Pumpe type	Single head pump	
Pressure rating	PN10	
Min. fluid temperature	-20	°C
Max. fluid temperature	110	°C

Hydraulic data (duty point)

Flow		m³/h
Head		m
Power input P1		kW
Speed	0	1/min

Minimum suction head

Temperature	50	95	110			°C
Minimum suction head	0.5	5	11			m

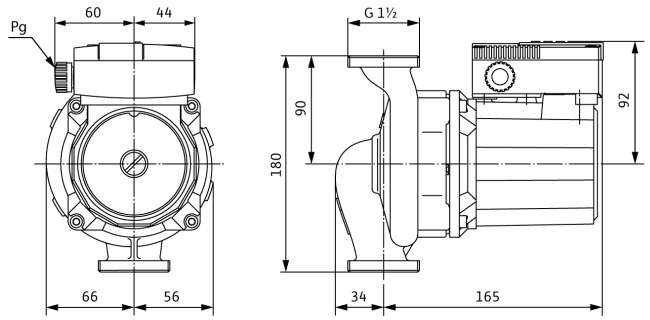

Materials / Shaft seal

Housing	EN-GJL-200
Shaft	X 46 Cr 13
Impeller	Fiber-reinforced PP
Bearing	Metal impregnated carbon

Dimensions per pump

mm

Suction side	1"/G 1½	/ PN 10
Discharge side	1"/G 1½	/ PN 10
Weight	4.8	kg

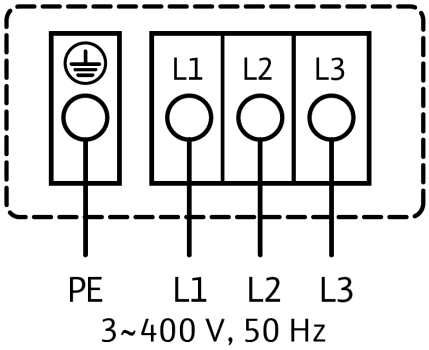

Motordata per Motor/Pump/

Rated power P2	0.09	kW
Power input P1	0.195	kW
Nominal speed	2600	1/min
Rated voltage	3~400 V, 50 Hz	
Max. current	0.45	A
Degree of protection	IP X4D	
Permitted voltage tolerance +/- 10%		

Item no. of standard version 2131755