Company name:
Created by:
Phone:

Date: 07/11/2022

Qty.	Description
1	**SP 30-29**

Note! Product picture may differ from actual product

Product No.: 13A01929

Submersible borehole pump, suitable for pumping clean water. Can be installed vertically or horizontally. All steel components are made in stainless steel, EN 1.4301 (AISI 304), that ensures high corrosive resistance. This pump carries drinking water approval.

The pump is fitted with a 26 kW MS6000 motor with sand shield, mechanical shaft seal, water-lubricated journal bearings and a volume compensating diaphragm. The motor is a canned type submersible motor offering good mechanical stability and high efficiency. Suitable for temperatures up to 40 °C.

The motor is fitted with the Grundfos Tempcon sensor that, by use of powerline communication together with a MP204 control panel, enables temperature monitoring.

The motor is for direct-on-line starting (DOL).

Further product details

The pump is suitable for applications similar to the following:

- raw-water supply
- irrigation
- groundwater lowering
- pressure boosting
- fountain applications.

The Grundfos SP pump is renowned for its high efficiency and already complies with the requirements of the Minimum Efficiency Index, and therefore Grundfos is amongst the best in class within submersible pumps.

Pump

All pump surfaces that are in contact with pumped liquids are made in stainless steel which makes them corrosion- and wear-resistant. The corrosion diagram below shows the capabilities of the pump and motor in relation to the temperature in Celsius (y-axis) and the concentration of chloride in ppm (x-axis).

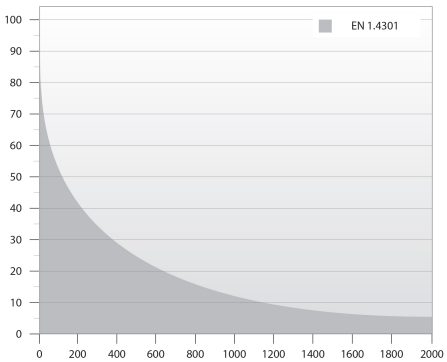

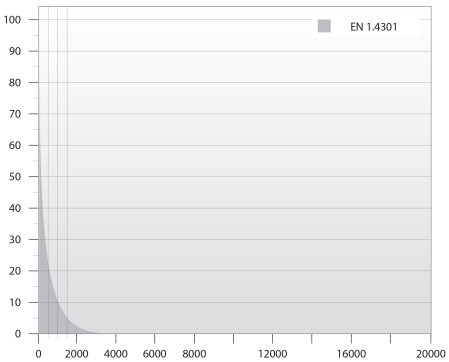

The elastomer parts in the pump are made of NBR (Nitrile-Butadiene Rubber) which ensures good wear resistance and long service intervals.

Company name:
Created by:
Phone:

Date: 07/11/2022

Qty.	Description
1	In case the pump is used for pumping water with high content of hydrocarbons or solvents, Grundfos offers FKM rubber parts (Fluorocarbon) which are oil and temperature-resistant up to 90 °C.

The pump is built with octagonal bearings with sand flush channels that minimise wear. As wear of the pump is inevitable, the pump design allows for easy replacement of all internal wear parts (bearings, impeller, wear rings and seal rings) to maintain high performance and a long lifetime.

The suction interconnector is fitted with a strainer to prevent large particles from entering the pump. The suction interconnector is designed to comply with NEMA standards for motor mounting/dimensions.

Motor

The stator is hermetically encapsulated in stainless steel and the windings are embedded in polymer compound. This results in high mechanical stability, optimum cooling and reduces the risk of short circuits in the windings.

The shaft seal faces are ceramic/carbon. The material combination provides good dry-running resistance. Together with the shaft seal housing, the sand shield forms a labyrinth seal, which during normal operating conditions prevents penetration of sand particles into the shaft seal.

The motor is fitted with the Grundfos Tempcon temperature sensor device that includes a NTC-resistor which senses the temperature.

The resistor is built-in close to the winding.
The temperature is converted into a high-frequency signal which is sent via the submersible drop cable and which can be converted into a temperature reading by means of Grundfos MP204.

The MP204 is an electronic motor protection device that also monitors the supply network quality to protect the submersible motor against supply network disturbances.

Liquid:

Pumped liquid:	Water
Liquid temperature range:	-15 .. 40 °C
Max liquid t at 0.15 m/sec:	40 °C
Selected liquid temperature:	20 °C
Density:	998.2 kg/m³

Technical:

Pump speed on which pump data are based:	2900 rpm
Rated flow:	30 m³/h
Rated head:	225 m
Shaft seal for motor:	CER/CARNBR
Approvals on nameplate:	CE,GOST2
Curve tolerance:	ISO9906:2012 3B
Motor version:	T40
Return valve:	YES

Materials:

Pump:	Stainless steel EN 1.4301 AISI 304
Impeller:	Stainless steel EN 1.4301 AISI 304
Motor:	Stainless steel DIN W.-Nr. 1.4301 AISI 304

Company name:
Created by:
Phone:

Date: 07/11/2022

Qty.	Description
1	Installation:
	Maximum operating pressure: 60 bar
	Maximum permissible outlet pressure: 33.6 bar
	Pump outlet: RP3
	Motor diameter: 6 inch
	Minimum borehole diameter: 145 mm
	Electrical data:
	Motor type: MS6000
	Motor flange design: GRUNDFOS
	Rated power - P2: 26 kW
	Power (P2) required by pump: 26 kW
	Mains frequency: 50 Hz
	Rated voltage: 3 x 380-400-415 V
	Rated current: 58.0-55.5-55.0 A
	Starting current: 480-530-560 %
	Cos phi - power factor: 0.87-0.85-0.82
	Rated speed: 2850-2870-2880 rpm
	Start. method: direct-on-line
	Enclosure class (IEC 34-5): IP68
	Insulation class (IEC 85): F
	Built-in temp. transmitter: yes
	Length of cable: 5 m
	Cable type: FLAT
	Motor No: 78195519
	Windings: Enamelled
	Others:
	Minimum efficiency index, MEI ≥: 0.50
	ErP status: EuP Standalone/Prod.
	Net weight: 134 kg
	Gross weight: 183 kg
	Shipping volume: 0.454 m³
	Danish VVS No.: 388338290

Company name:
Created by:
Phone:

Date: 07/11/2022

13A01929 SP 30-29 50 Hz

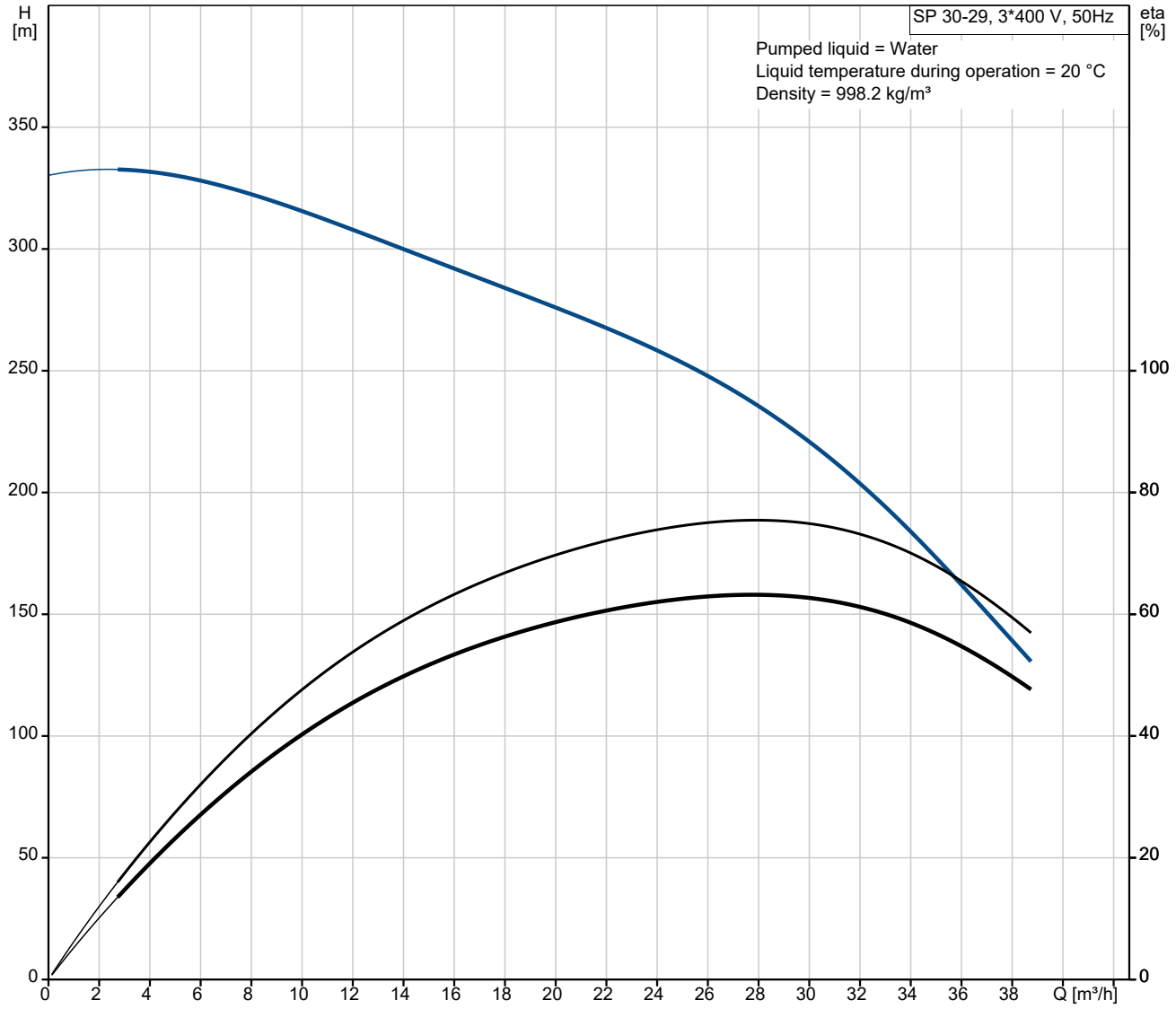

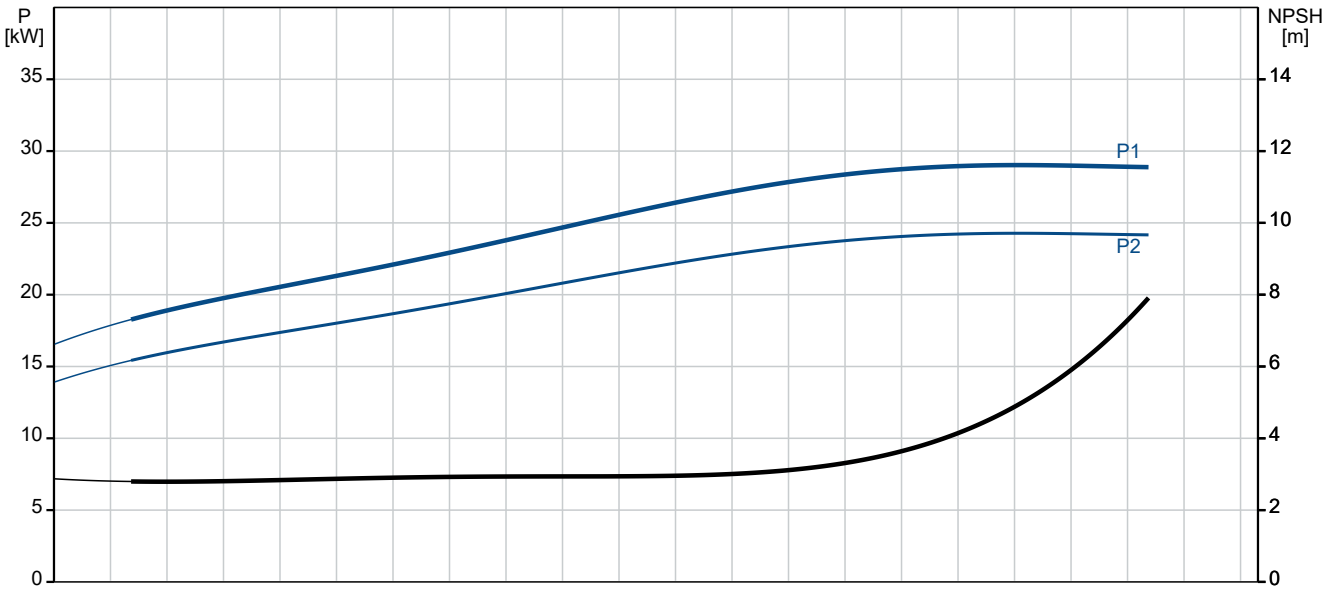

Company name:
Created by:
Phone:

Date: 07/11/2022

Description	Value
General information:	
Product name:	SP 30-29
Product No:	13A01929
EAN number:	5700390381929
Technical:	
Pump speed on which pump data are based:	2900 rpm
Rated flow:	30 m³/h
Rated head:	225 m
Number of stages:	29
Number of reduced-diameter impellers:	NONE
Shaft seal for motor:	CER/CARNBR
Approvals on nameplate:	CE,GOST2
Curve tolerance:	ISO9906:2012 3B
The first model is called A which is followed by model B, C etc.:	B
Motor version:	T40
Return valve:	YES
Materials:	
Pump:	Stainless steel
Pump:	EN 1.4301
Pump:	AISI 304
Impeller:	Stainless steel
Impeller:	EN 1.4301
Impeller:	AISI 304
Motor:	Stainless steel
Motor:	DIN W.-Nr. 1.4301
Motor:	AISI 304
Installation:	
Maximum operating pressure:	60 bar
Maximum permissible outlet pressure:	33.6 bar
Pump outlet:	RP3
Motor diameter:	6 inch
Minimum borehole diameter:	145 mm
Liquid:	
Pumped liquid:	Water
Liquid temperature range:	-15 .. 40 °C
Max liquid t at 0.15 m/sec:	40 °C
Selected liquid temperature:	20 °C
Density:	998.2 kg/m³
Electrical data:	
Motor type:	MS6000
Motor flange design:	GRUNDFOS
Rated power - P2:	26 kW
Power (P2) required by pump:	26 kW
Mains frequency:	50 Hz
Rated voltage:	3 x 380-400-415 V
Rated current:	58.0-55.5-55.0 A
Starting current:	480-530-560 %
Cos phi - power factor:	0.87-0.85-0.82
Rated speed:	2850-2870-2880 rpm
Start. method:	direct-on-line
Enclosure class (IEC 34-5):	IP68
Insulation class (IEC 85):	F
Built-in motor protection:	NONE
Thermal protec:	external
Built-in temp. transmitter:	yes
Length of cable:	5 m
Cable type:	FLAT

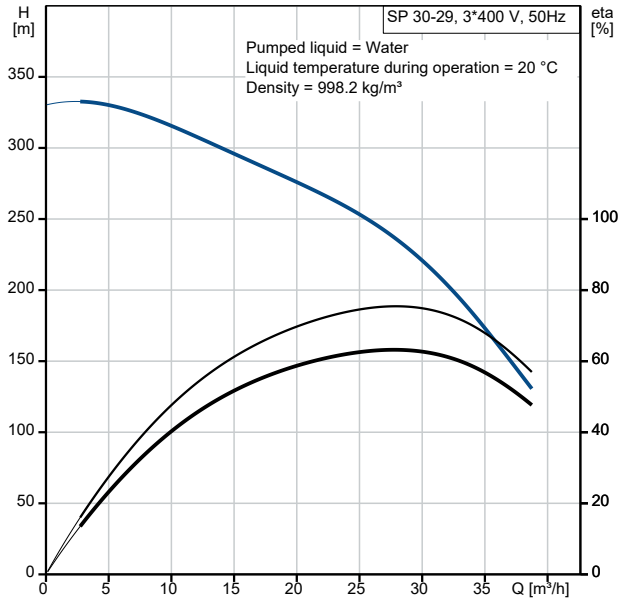

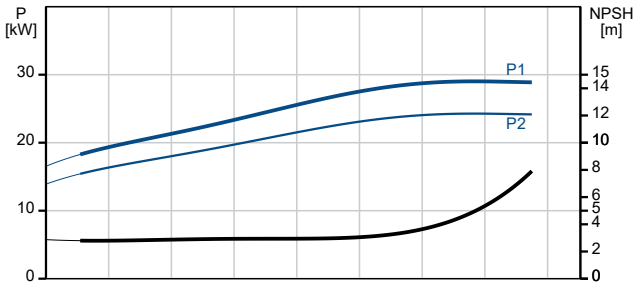

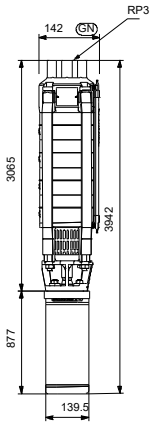

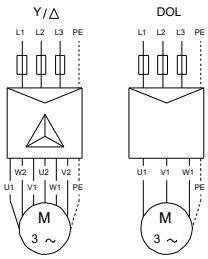

U1, W2	Brown
V1, U2	Black
W1, V2	Grey

Company name:
Created by:
Phone:

Date: 07/11/2022

Description	Value
Motor No:	78195519
Windings:	Enamelled
Others:	
Minimum efficiency index, MEI ≥:	0.50
ErP status:	EuP Standalone/Prod.
Net weight:	134 kg
Gross weight:	183 kg
Shipping volume:	0.454 m³
Danish VVS No.:	388338290

Company name:
Created by:
Phone:

Date: 07/11/2022

13A01929 SP 30-29 50 Hz

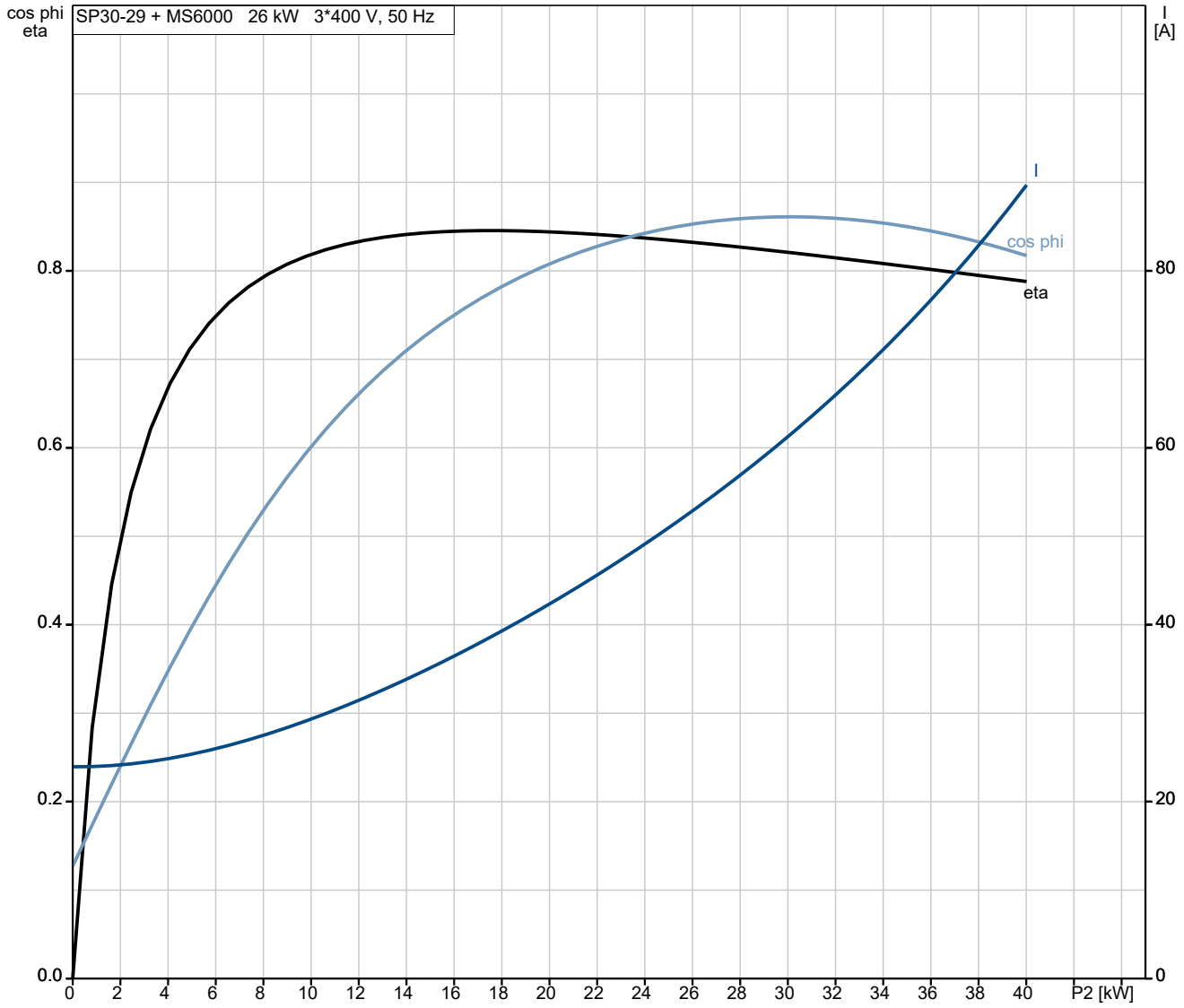

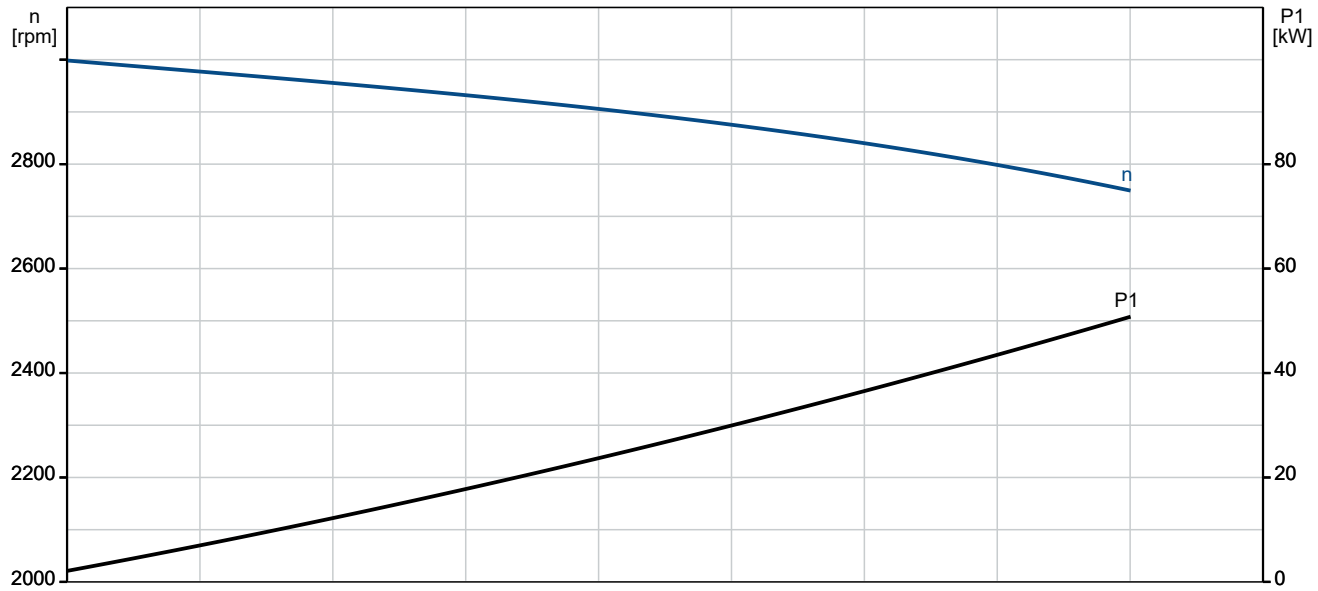

Company name:
Created by:
Phone:

Date: 07/11/2022

13A01929 SP 30-29 50 Hz

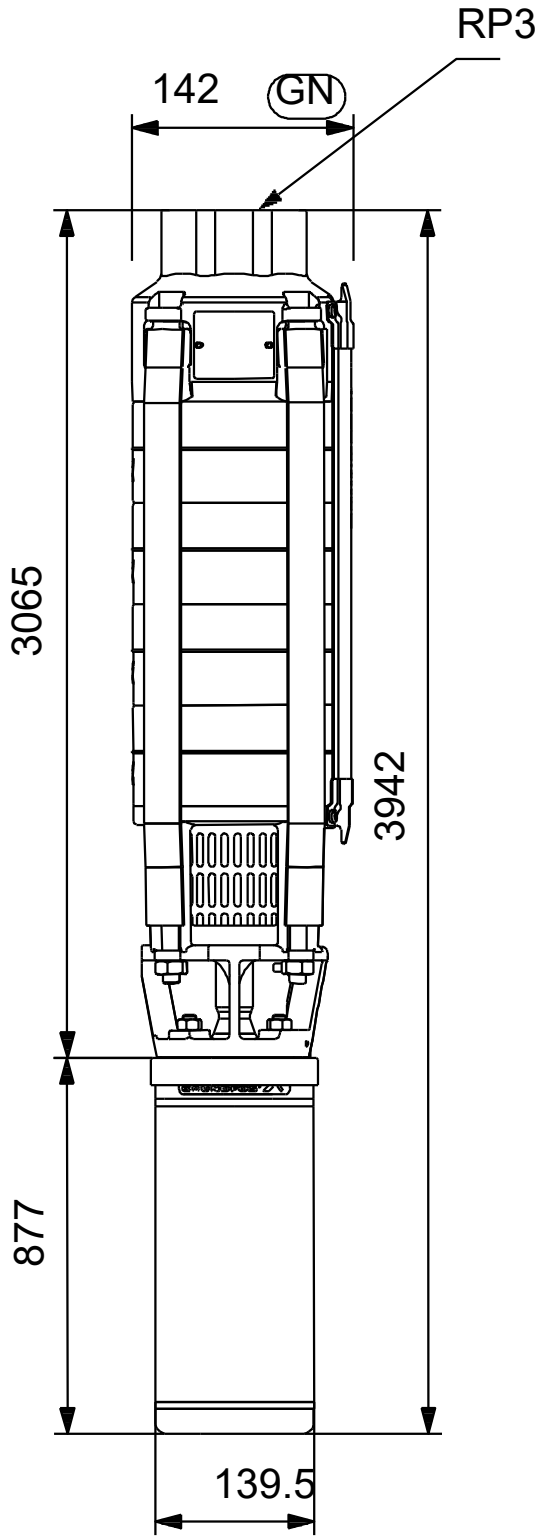

Note! All units are in [mm] unless others are stated.
Disclaimer: This simplified dimensional drawing does not show all details.

Company name:
Created by:
Phone:

Date: 07/11/2022

13A01929 SP 30-29 50 Hz

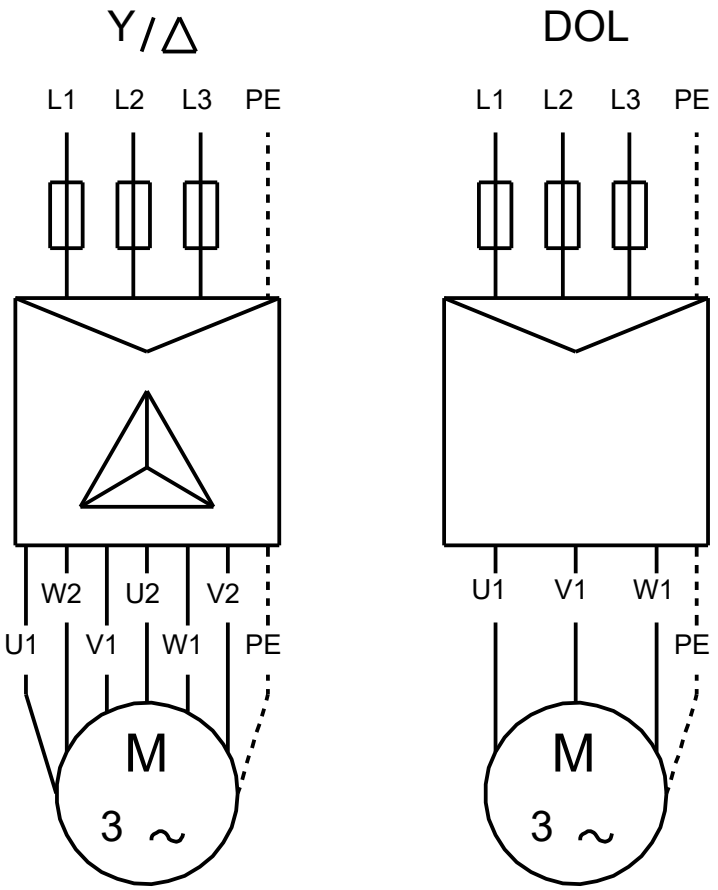

U1, W2	Brown
V1, U2	Black
W1, V2	Grey

Note! All units are in [mm] unless others are stated.

Company name:
Created by:
Phone:

Date: 07/11/2022

Order Data:

Position	Your pos.	Product name	Amount	Product No	Total
		SP 30-29	1	13A01929	Price on request