Company name:
Created by:
Phone:

Date: 25/10/2021

Qty.	Description
1	**TP 100-120/2 AI-F-A-BUBE**

Note! Product picture may differ from actual product

Product No.: On request

Single-stage, close-coupled, volute pump with in-line suction and discharge ports of identical diameter.
The pump is of the top-pull-out design, i.e. the power head (motor, pump head and impeller) can be removed for maintenance or service while the pump housing remains in the pipework.

The pump is fitted with an unbalanced rubber bellows seal.
The shaft seal is according to EN 12756. Pipework connection is via PN 6 DIN flanges (EN 1092-2 and ISO 7005-2).

The pump is fitted with a fan-cooled asynchronous motor.
The product's minimum efficiency index (MEI) is greater or equal to 0.70. This is by the Commission Regulation (EU) considered as an indicative benchmark for best-performing water pump available on the market as from 1 January 2013.

Cast-iron parts have an epoxy-based coating made in a cathodic electro-deposition (CED) process. CED is a high-quality dip-painting process where an electrical field around the products ensures deposition of paint particles as a thin, well-controlled layer on the surface.

Pump

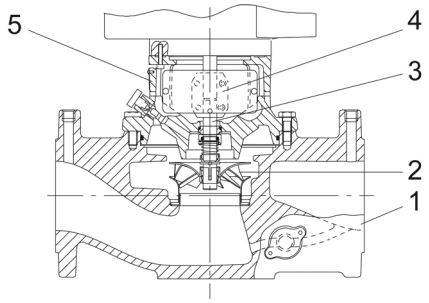

1: Pump housing
2: Impeller
3: Shaft
4: Coupling
5: Pump head

The pump housing is provided with a replaceable stainless steel/PTFE neck ring to reduce the amount of liquid running from the discharge side of the impeller to the suction side.

The impeller is secured with a split cone with nut.

The pump is fitted with an unbalanced rubber bellows seal with torque transmission across the spring and around the bellows. Due to the bellows, the seal does not wear the shaft, and the axial movement is not prevented by deposits on the shaft.

Primary seal:

- Rotating seal ring material: tungsten carbide (WC)
- Stationary seat material: carbon graphite, resin-impregnated

This is a widely used material pairing.
If the pumped liquid contains particles, wear on the seal faces must be expected.

Qty.	Description

Due to the favourable lubricating properties of carbon graphite, the seal is suitable for use even under poor lubricating conditions, such as hot water.

However, under such conditions, wear on the carbon graphite face reduces seal life.

Secondary seal material: EPDM (ethylene-propylene rubber)

EPDM has excellent resistance to hot water. EPDM is not suitable for mineral oils.

A circulation of liquid through the duct of the air vent screw ensures lubrication and cooling of the shaft seal.

The flanges have tappings for mounting of pressure gauges.

The motor stool forms connection between the pump housing and the motor, and is equipped with a manual air vent screw for venting of the pump housing and the shaft seal chamber. The sealing between motor stool and pump housing is an O-ring.

The central part of the motor stool is provided with guards for protection against the shaft and coupling. Motor and pump shaft are connected via a shell coupling.

Motor

The motor is a totally enclosed, fan-cooled motor with principal dimensions to IEC and DIN standards. Electrical tolerances comply with IEC 60034.

The motor is flange-mounted with tapped-hole flange (FT).

Motor-mounting designation in accordance with IEC 60034-7: IM B 14, IM V 18 (Code I) / IM 3601, IM 3611 (Code II).

The motor efficiency is classified as IE3 in accordance with IEC 60034-30-1.

The motor does not incorporate motor protection and must be connected to a motor-protective circuit breaker which can be manually reset. The motor-protective circuit breaker must be set according to the rated current of the motor (I1/1).

The motor can be connected to a variable speed drive for adjustment of pump performance to any duty point. Grundfos CUE offers a range of variable speed drives. Please find more information in Grundfos Product Center.

Further product details

Technical data

Liquid:

Liquid temperature range:	0 .. 140 °C
Selected liquid temperature:	20 °C

Technical:

Materials:

Installation:

t max amb:	60 °C
Maximum operating pressure:	6 bar

Electrical data:

Starting current:	850-950 %

Others:

Company name:
Created by:
Phone:

Date: 25/10/2021

On request TP 100-120/2 AI-F-A-BUBE 50 Hz

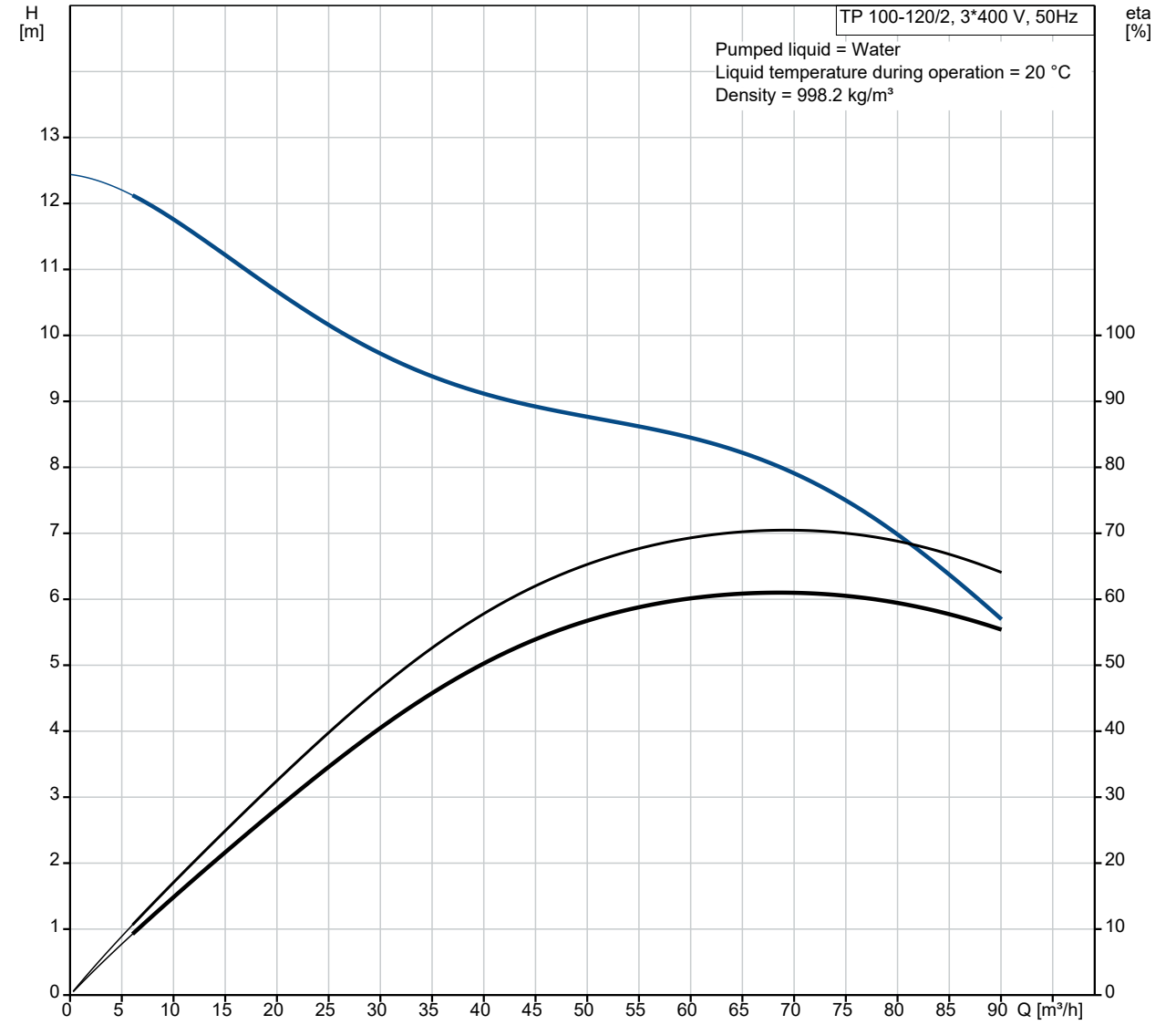

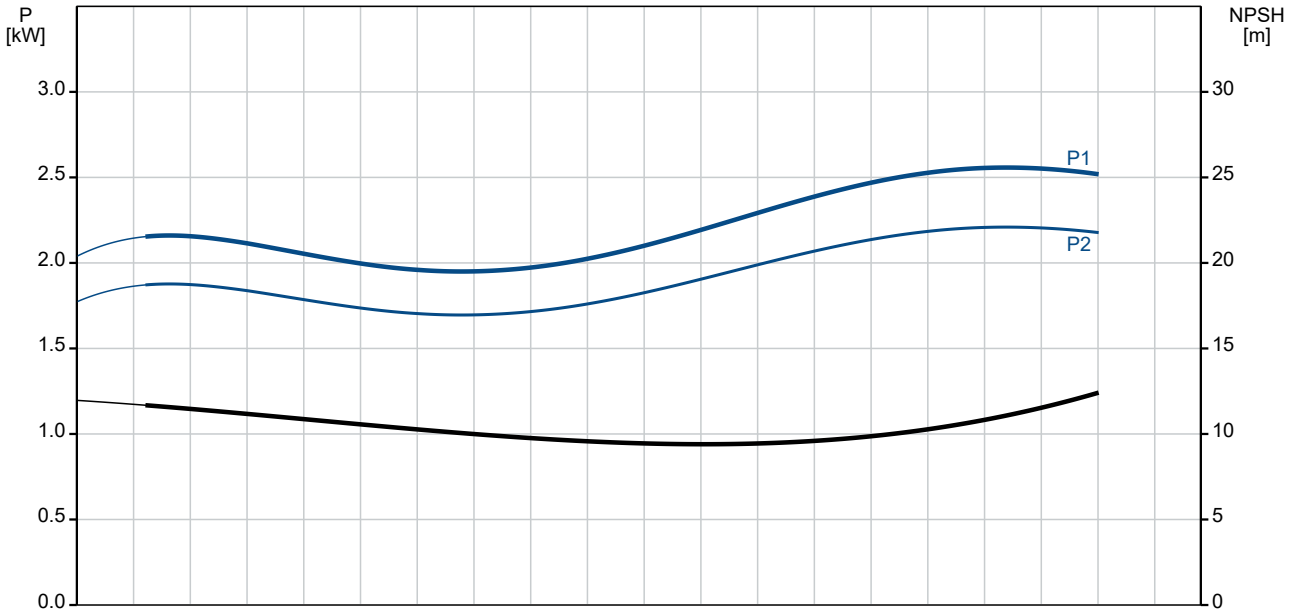

Company name:
Created by:
Phone:

Date: 25/10/2021

Description	Value
General information:	
Product name:	TP 100-120/2 AI-F-A-BUBE
Product No:	On request
EAN number:	On request
Technical:	
Pump speed on which pump data are based:	2910 rpm
Rated flow:	72.8 m³/h
Rated head:	7.8 m
Maximum head:	120 dm
Actual impeller diameter:	104 mm
Code for shaft seal:	BUBE
Curve tolerance:	ISO9906:2012 3B
Pump version:	AI
Materials:	
Pump housing:	Cast iron
Pump housing:	EN-JL1040
Pump housing:	A48-40 B
Impeller:	Stainless steel
Impeller:	1.4301
Impeller:	304
Material code:	A
Installation:	
t max amb:	60 °C
Maximum operating pressure:	6 bar
Type of connection:	DIN
Size of connection:	DN 100
Pressure rating for connection:	PN 6
Port-to-port length:	450 mm
Connect code:	F
Liquid:	
Pumped liquid:	Water
Liquid temperature range:	0 .. 140 °C
Selected liquid temperature:	20 °C
Density:	998.2 kg/m³
Electrical data:	
Motor type:	90LC
IE Efficiency class:	IE3
Rated power - P2:	2.2 kW
Mains frequency:	50 Hz
Rated voltage:	3 x 380-415D V
Rated current:	4.45 A
Starting current:	850-950 %
Cos phi - power factor:	0.89-0.87
Rated speed:	2890-2910 rpm
Efficiency:	IE3 85,9%
Motor efficiency at full load:	85.9 %
Motor efficiency at 3/4 load:	86.8 %
Motor efficiency at 1/2 load:	86.0 %
Number of poles:	2
Enclosure class (IEC 34-5):	55 Dust/Jetting
Insulation class (IEC 85):	F
Built-in motor protection:	NONE
Motor No:	85U15908
Others:	
Minimum efficiency index, MEI ≥:	0.70
Net weight:	60.3 kg
Gross weight:	66.2 kg

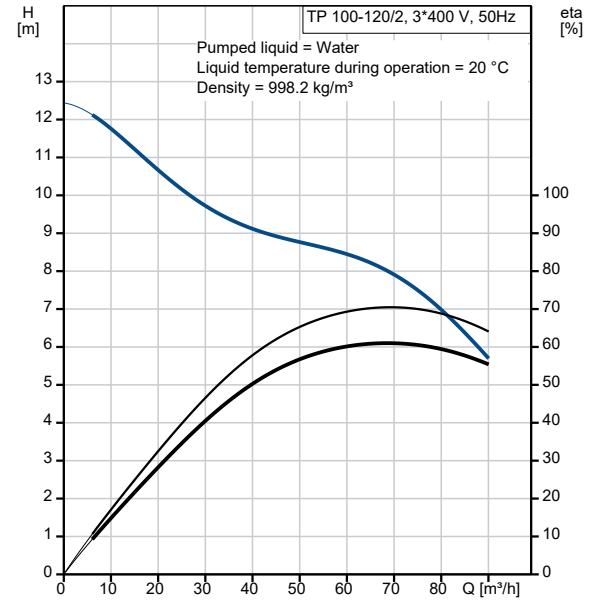

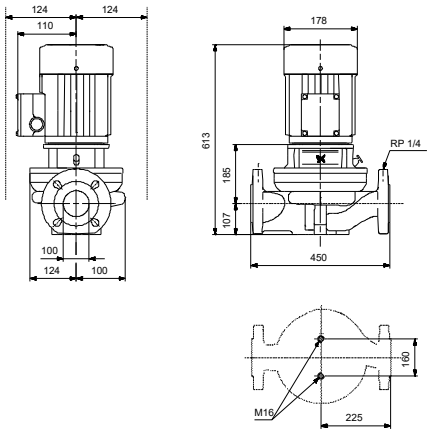

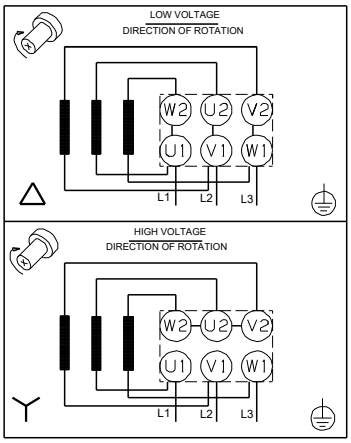

Company name:
Created by:
Phone:

Date: 25/10/2021

Description	Value
Shipping volume:	0.16 m³
Sales region:	GB

Company name:
Created by:
Phone:

Date: 25/10/2021

On request TP 100-120/2 AI-F-A-BUBE 50 Hz

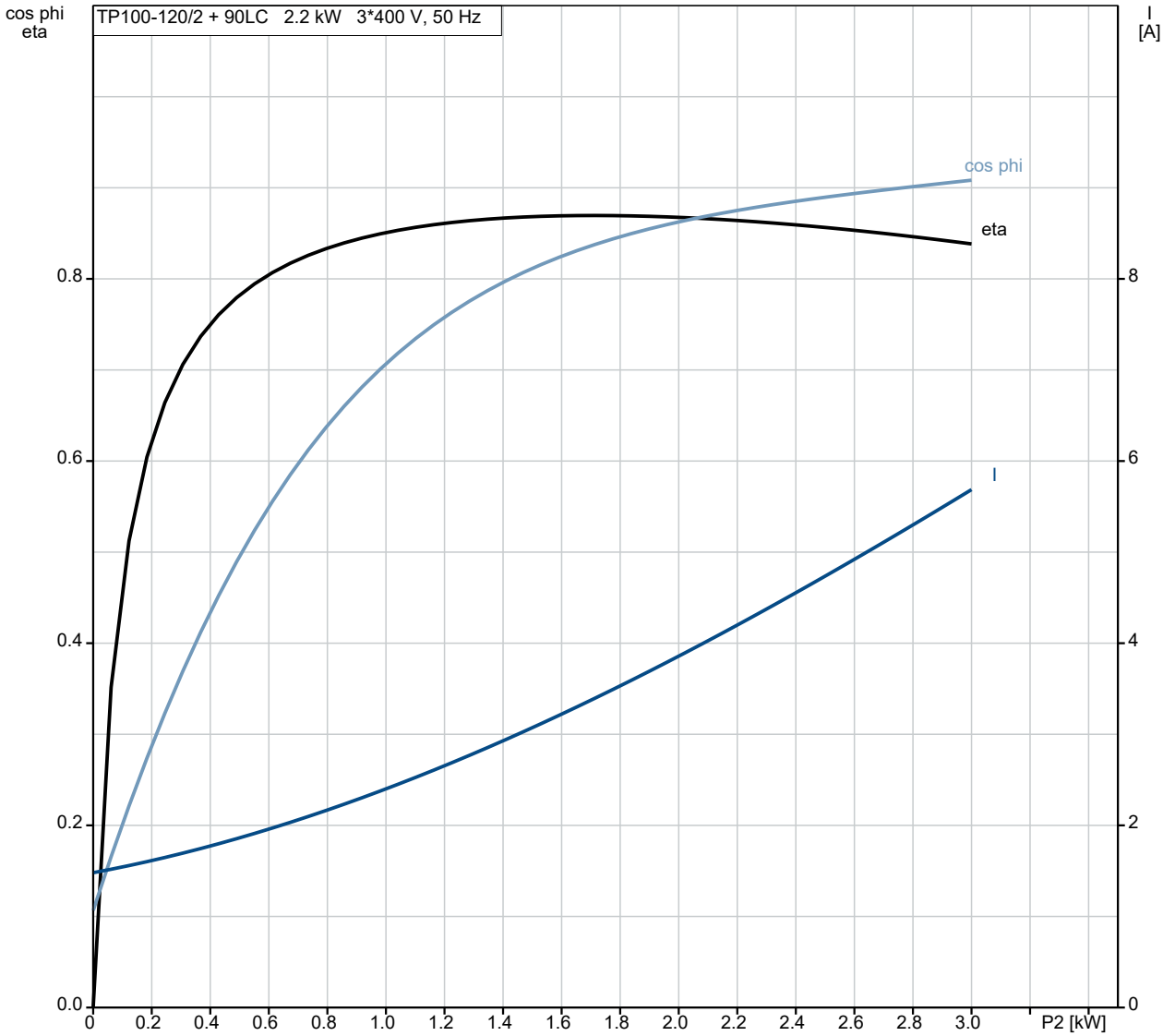

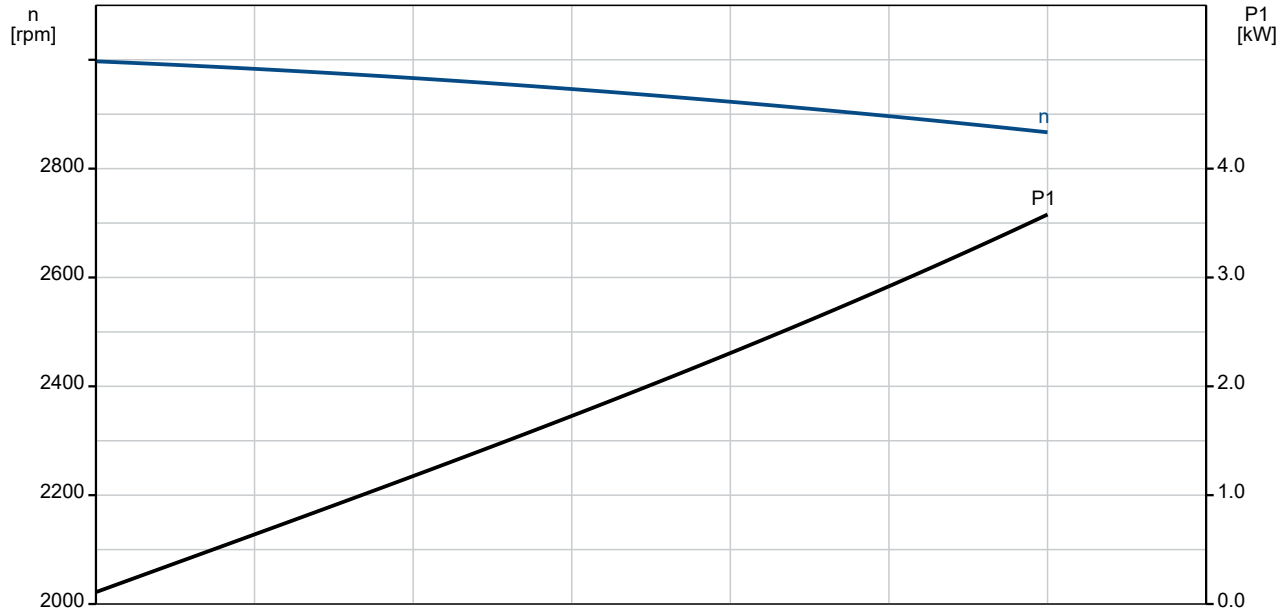

Company name:
Created by:
Phone:

Date: 25/10/2021

On request TP 100-120/2 AI-F-A-BUBE 50 Hz

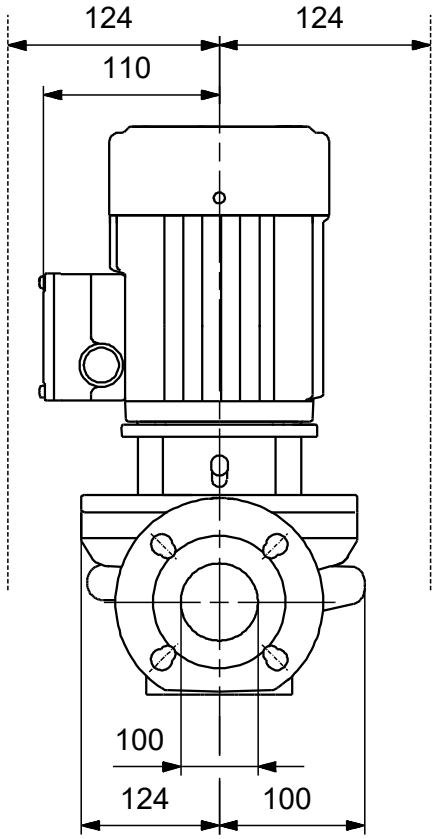

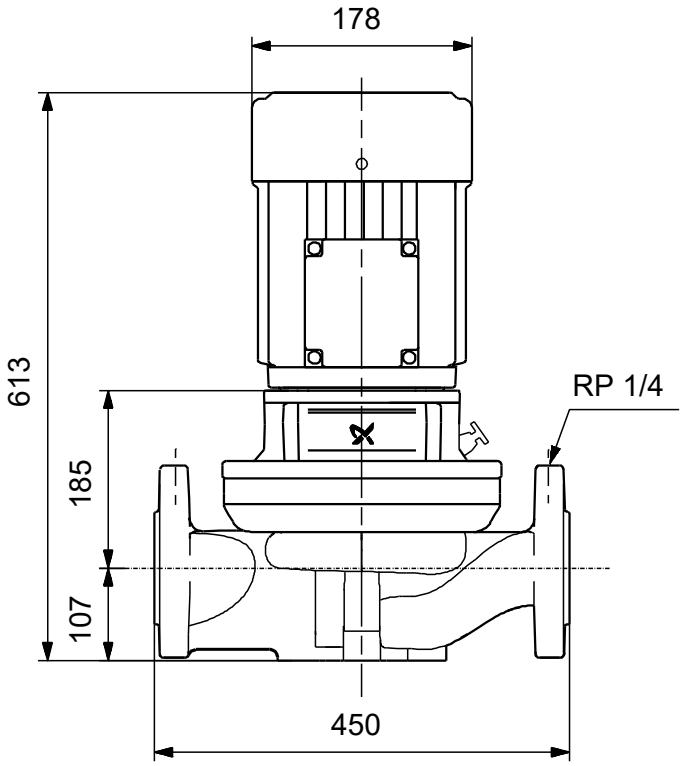

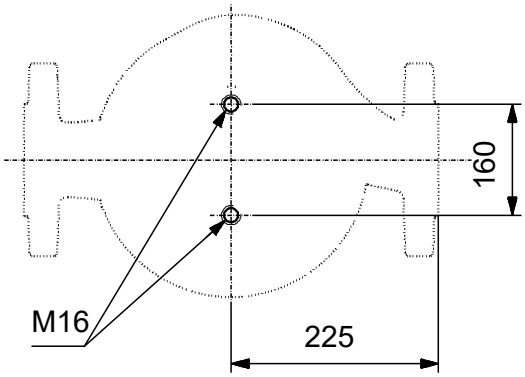

Note! All units are in [mm] unless others are stated.
Disclaimer: This simplified dimensional drawing does not show all details.

Company name:
Created by:
Phone:

Date: 25/10/2021

On request TP 100-120/2 AI-F-A-BUBE 50 Hz

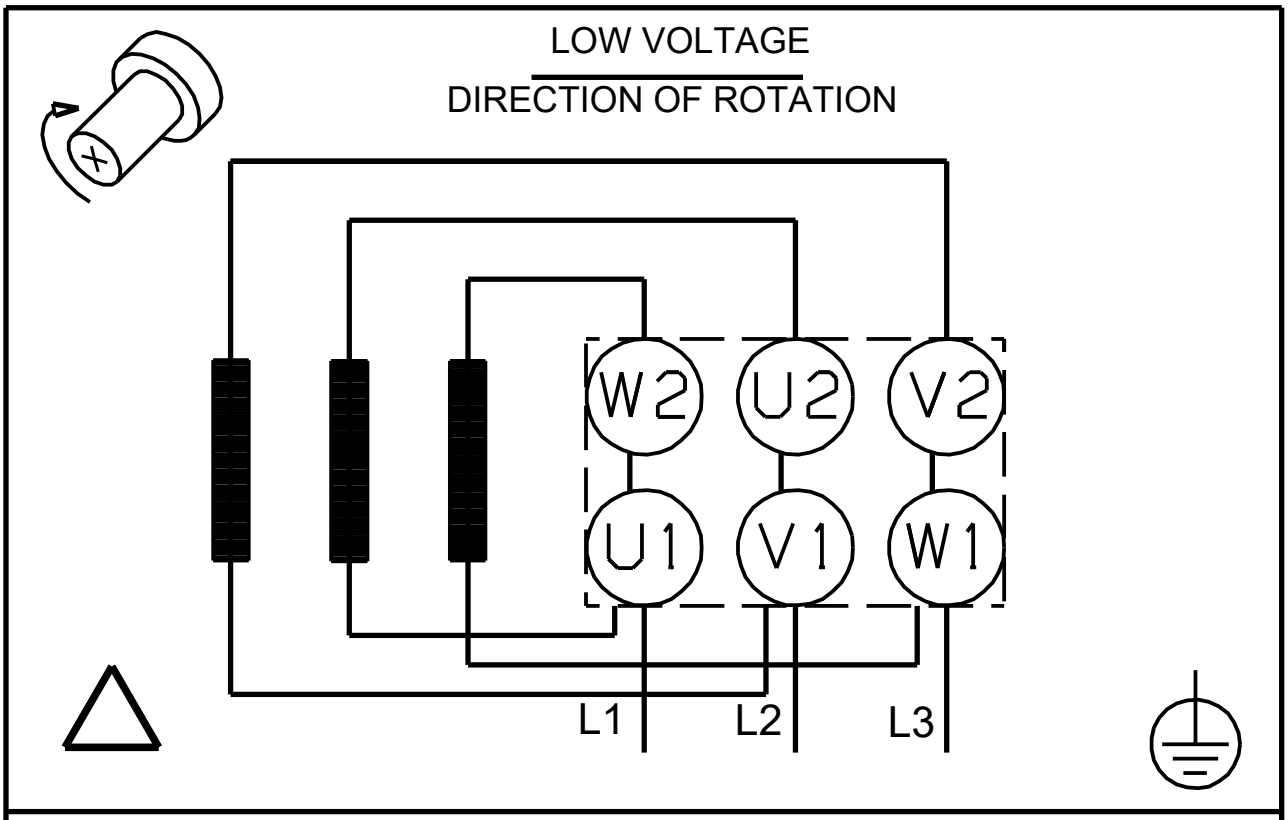

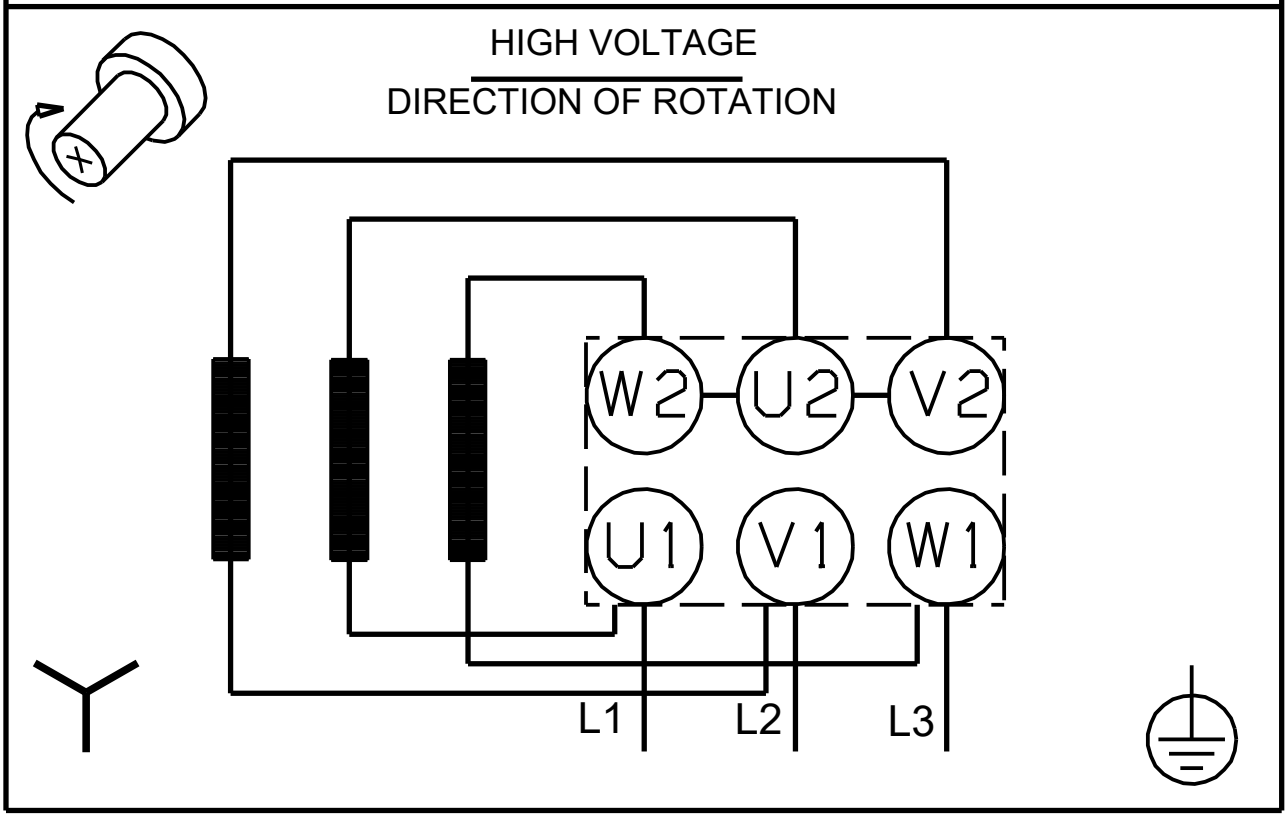

Note! All units are in [mm] unless others are stated.

Company name:
Created by:
Phone:

Date: 25/10/2021

Order Data:

Product name: TP 100-120/2
Amount: 1
Product No: On request

Total: Price on request