Qty.	Description
1	**CRN 1-11 A-FGJ-H-E-HQQE**

Note! Product picture may differ from actual product

Product No.: On request

Vertical, multistage centrifugal pump with inlet and outlet ports on same the level (inline). Pump materials in contact with the liquid are in high-grade stainless steel. A cartridge shaft seal ensures high reliability, safe handling, and easy access and service. Power transmission is via a rigid split coupling. Pipe connection is via combined DIN-ANSI-JIS flanges.

The pump is fitted with a 3-phase, fan-cooled asynchronous motor.

Liquid:

Pumped liquid:	Water
Liquid temperature range:	-20 .. 120 °C
Selected liquid temperature:	20 °C
Density:	998.2 kg/m³

Technical:

Pump speed on which pump data are based:	2856 rpm
Rated flow:	1.8 m³/h
Rated head:	51.2 m
Pump orientation:	Vertical
Shaft seal arrangement:	Single
Code for shaft seal:	HQQE
Approvals:	CE,EAC,UKCA,SEPRO
Approvals for drinking water:	WRAS,ACS
Curve tolerance:	ISO9906:2012 3B

Materials:

Base:	Stainless steel
	EN 1.4408
	AISI 316
Impeller:	Stainless steel
	EN 1.4401
	AISI 316
Bearing:	SIC

Installation:

t max amb:	60 °C
Maximum operating pressure:	25 bar
Max pressure at stated temp:	25 bar / 120 °C
	25 bar / -20 °C
Type of connection:	DIN / ANSI / JIS
Size of inlet connection:	DN 25/32
Size of outlet connection:	DN 25/32
Pressure rating for connection:	PN 25
Flange rating inlet:	300 lb
Flange size for motor:	FT85

Electrical data:

Motor standard:	IEC
Motor type:	71B
IE Efficiency class:	IE3
Rated power - P2:	0.55 kW
Power (P2) required by pump:	0.55 kW
Mains frequency:	50 Hz

Qty.	Description	
1	Rated voltage:	3 x 220-240D/380-415Y V
	Rated current:	2.50/1.44 A
	Starting current:	580-620 %
	Cos phi - power factor:	0.80-0.70
	Rated speed:	2830-2850 rpm
	Efficiency:	IE3 77,8%
	Motor efficiency at full load:	77.8 %
	Motor efficiency at 3/4 load:	81.5 %
	Motor efficiency at 1/2 load:	79.5 %
	Number of poles:	2
	Enclosure class (IEC 34-5):	55 Dust/Jetting
	Insulation class (IEC 85):	F
	Motor No:	85805103
	Controls:	
	Frequency converter:	NONE
	Others:	
	Minimum efficiency index, MEI ≥:	0.70
	Net weight:	21.6 kg
	Gross weight:	24.5 kg
	Shipping volume:	0.074 m³
	Country of origin:	GB
	Custom tariff no.:	84137075

On request CRN 1-11 A-FGJ-H-E-HQQE 50 Hz

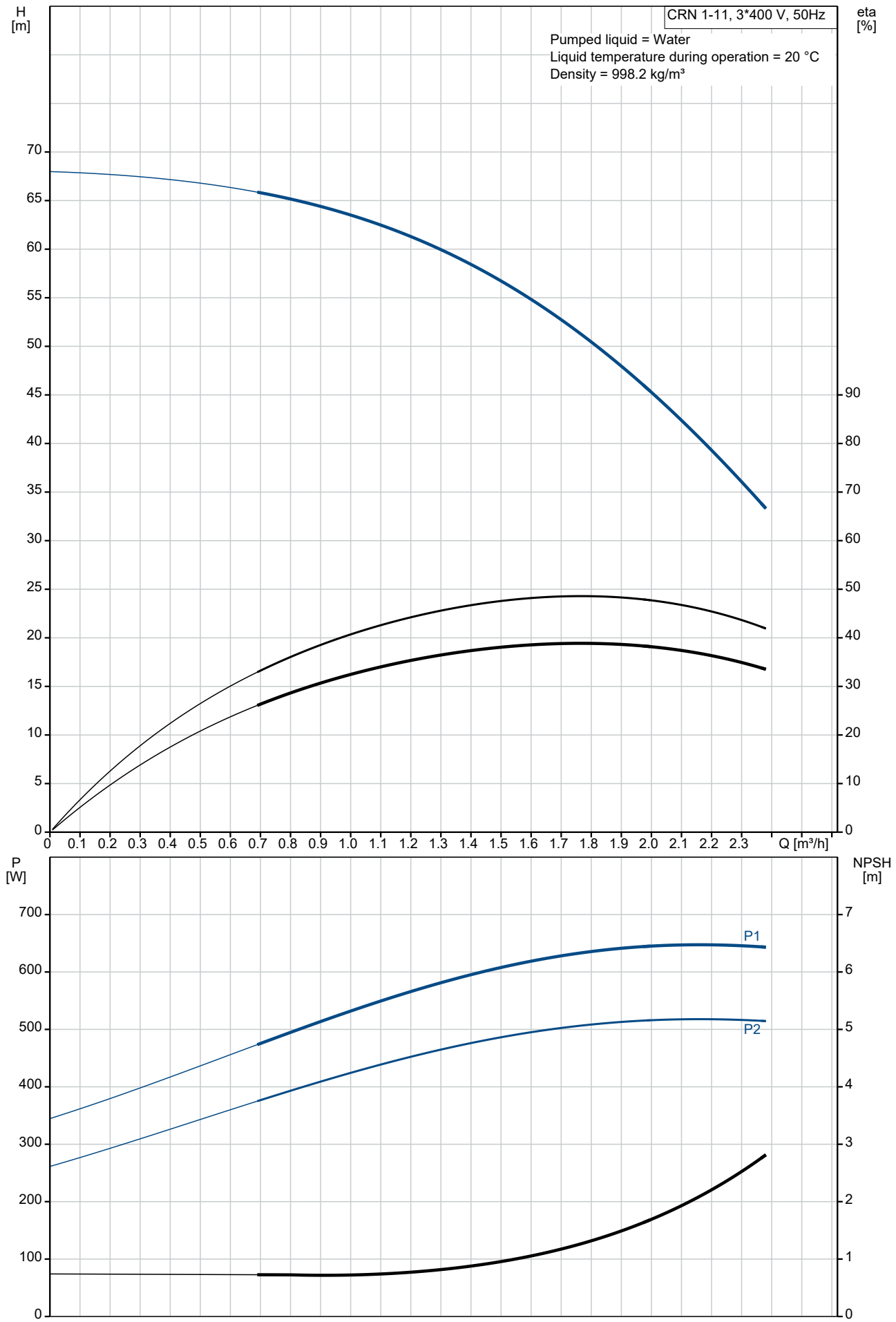

Description	Value
General information:	
Product name:	CRN 1-11 A-FGJ-H-E-HQQE
Product No:	On request
EAN number:	On request
Technical:	
Pump speed on which pump data are based:	2856 rpm
Rated flow:	1.8 m³/h
Rated head:	51.2 m
Maximum head:	67.9 m
Stages:	11
Impellers:	11
Number of reduced-diameter impellers:	0
Low NPSH:	N
Pump orientation:	Vertical
Shaft seal arrangement:	Single
Code for shaft seal:	HQQE
Approvals:	CE,EAC,UKCA,SEPRO
Approvals for drinking water:	WRAS,ACS
Curve tolerance:	ISO9906:2012 3B
Pump version:	A
Model:	A
Materials:	
Base:	Stainless steel
Base:	EN 1.4408
Base:	AISI 316
Impeller:	Stainless steel
Impeller:	EN 1.4401
Impeller:	AISI 316
Material code:	H
Code for rubber:	E
Bearing:	SIC
Installation:	
t max amb:	60 °C
Maximum operating pressure:	25 bar
Max pressure at stated temp:	25 bar / 120 °C
Max pressure at stated temp:	25 bar / -20 °C
Type of connection:	DIN / ANSI / JIS
Size of inlet connection:	DN 25/32
Size of outlet connection:	DN 25/32
Pressure rating for connection:	PN 25
Flange rating inlet:	300 lb
Flange size for motor:	FT85
Connect code:	FGJ
Liquid:	
Pumped liquid:	Water
Liquid temperature range:	-20 .. 120 °C
Selected liquid temperature:	20 °C
Density:	998.2 kg/m³
Electrical data:	
Motor standard:	IEC
Motor type:	71B
IE Efficiency class:	IE3
Rated power - P2:	0.55 kW
Power (P2) required by pump:	0.55 kW
Mains frequency:	50 Hz
Rated voltage:	3 x 220-240D/380-415Y V
Rated current:	2.50/1.44 A
Starting current:	580-620 %
Cos phi - power factor:	0.80-0.70
Rated speed:	2830-2850 rpm
Efficiency:	IE3 77,8%
Motor efficiency at full load:	77.8 %

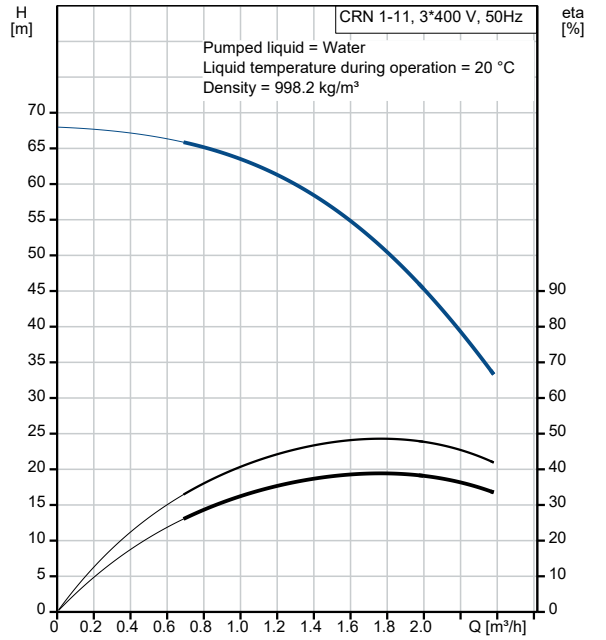

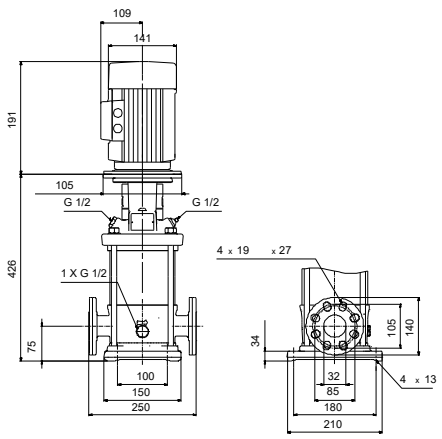

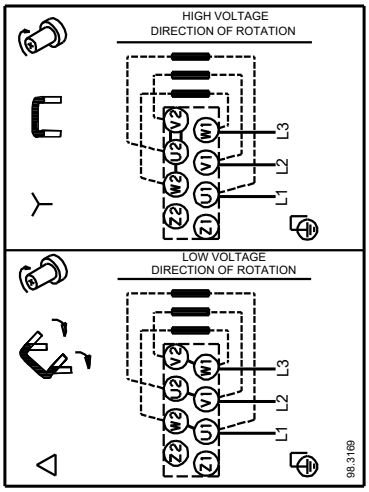

Description	Value
Motor efficiency at 3/4 load:	81.5 %
Motor efficiency at 1/2 load:	79.5 %
Number of poles:	2
Enclosure class (IEC 34-5):	55 Dust/Jetting
Insulation class (IEC 85):	F
Built-in motor protection:	NONE
Motor No:	85805103
Controls:	
Frequency converter:	NONE
Others:	
Minimum efficiency index, MEI ≥:	0.70
Net weight:	21.6 kg
Gross weight:	24.5 kg
Shipping volume:	0.074 m^3
Sales region:	Great Britain
Country of origin:	GB
Custom tariff no.:	84137075

On request CRN 1-11 A-FGJ-H-E-HQQE 50 Hz

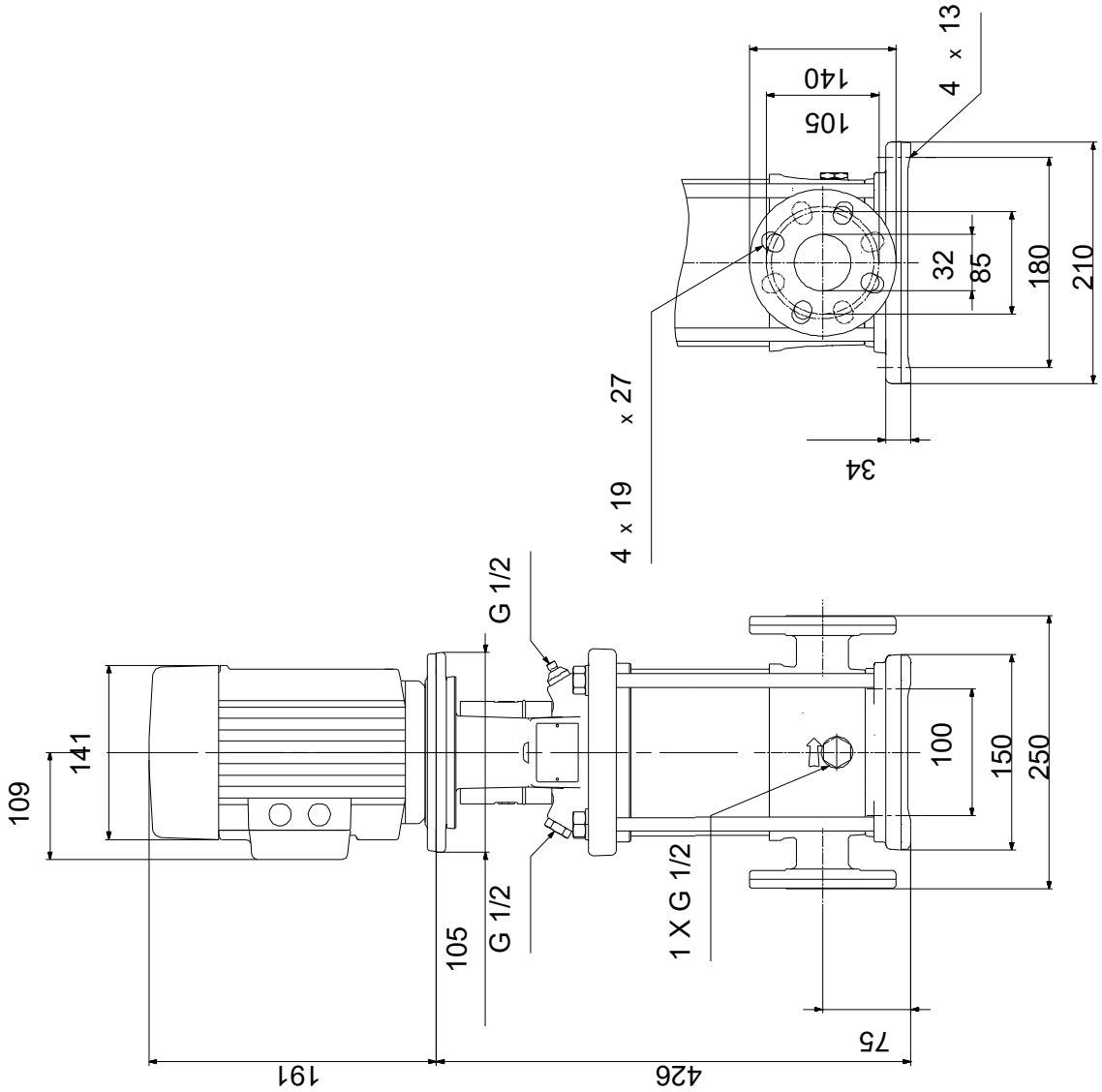

Note! All units are in [mm] unless others are stated.
Disclaimer: This simplified dimensional drawing does not show all details.

On request CRN 1-11 A-FGJ-H-E-HQQE 50 Hz

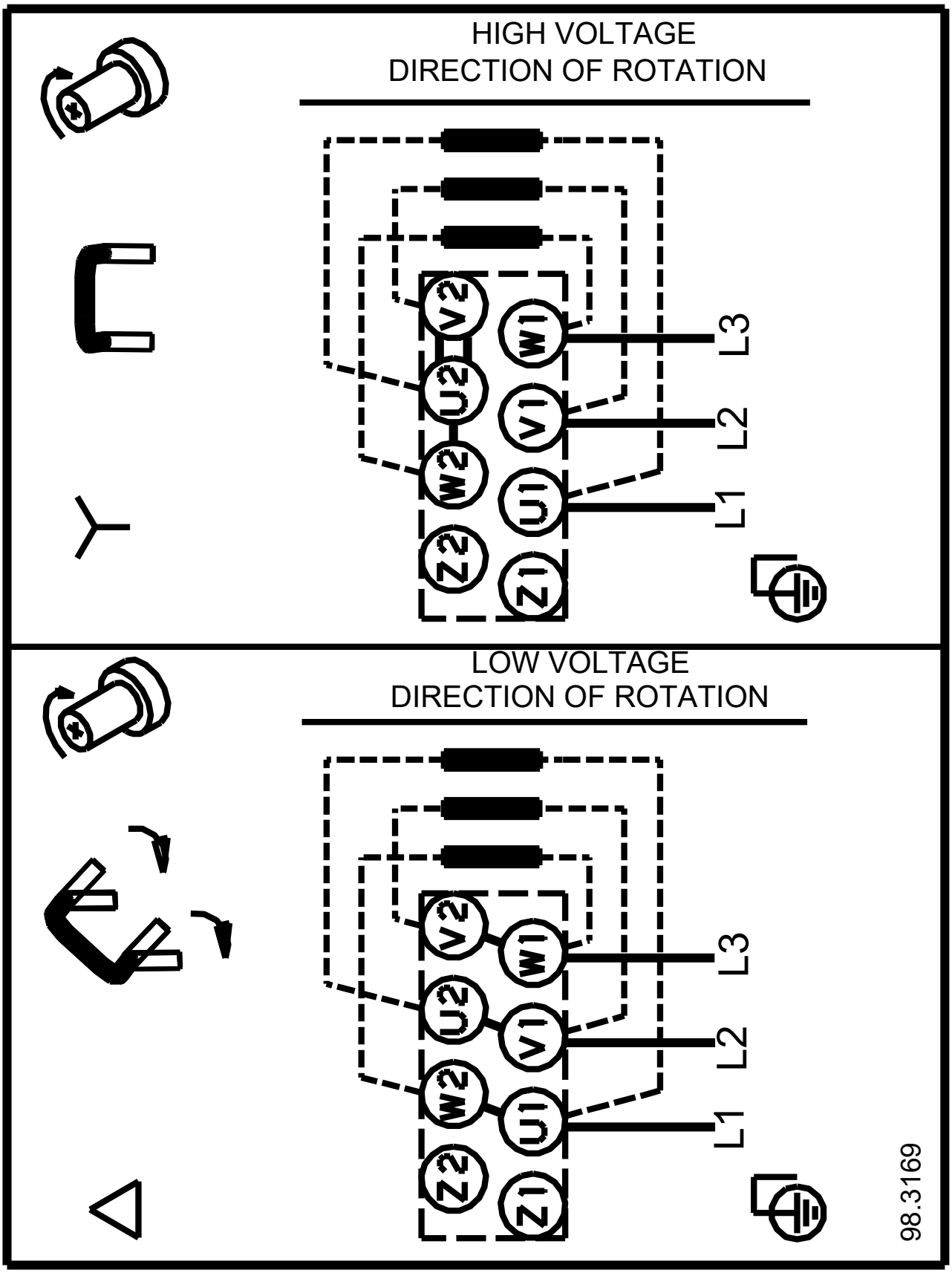

Note! All units are in [mm] unless others are stated.

Order Data:

Position	Your pos.	Product name	Amount	Product No	Total
		CRN 1-11	1	On request	Price on request