Company name:
Created by:
Phone:

Date: 10/09/2021

Qty.	Description
1	**TPD 100-30/4 AI-F-A-BQQE-EX3**

Note! Product picture may differ from actual product

Product No.: 98958051

Single-stage, close-coupled, volute twin-head pump with in-line suction and discharge ports of identical diameter. The twin-head pump is designed with two parallel power-heads.

The pump is of the top-pull-out design, i.e. the power head (motor, pump head and impeller) can be removed for maintenance or service while the pump housing remains in the pipework.

Each power head is fitted with an unbalanced rubber bellows seal.

The shaft seal is according to EN 12756. Pipework connection is via PN 6 DIN flanges (EN 1092-2 and ISO 7005-2).

Each power head is fitted with a fan-cooled asynchronous motor of indentical size.

Cast-iron parts have an epoxy-based coating made in a cathodic electro-deposition (CED) process. CED is a high-quality dip-painting process where an electrical field around the products ensures deposition of paint particles as a thin, well-controlled layer on the surface.

Pump

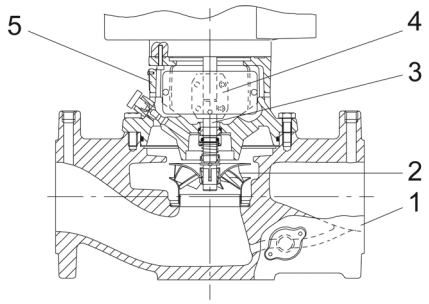

1: Pump housing
2: Impeller
3: Shaft
4: Coupling
5: Pump head

The twin-head pump is designed with two parallel power-heads. A flap valve in the common discharge port is opened by the flow of the pumped liquid and prevents backflow of liquid into the idle pump head.

The pump housing is provided with a replaceable stainless steel/PTFE neck ring to reduce the amount of liquid running from the discharge side of the impeller to the suction side.

The impeller is secured with a split cone with nut.

The pump is fitted with an unbalanced rubber bellows seal with torque transmission across the spring and around the bellows. Due to the bellows, the seal does not wear the shaft, and the axial movement is not prevented by deposits on the shaft.

Primary seal:

Qty.	Description

- Rotating seal ring material: silicon carbide (SiC)
- Stationary seat material: silicon carbide (SiC)

This material pairing is used where higher corrosion resistance is required. The high hardness of this material pairing offers good resistance against abrasive particles.

Secondary seal material: EPDM (ethylene-propylene rubber)

EPDM has excellent resistance to hot water. EPDM is not suitable for mineral oils.

A circulation of liquid through the duct of the air vent screw ensures lubrication and cooling of the shaft seal.

The pump housing has two Rp 1/8 tappings for mounting of automatic air vents. Fit an air vent to the upper pump housing if the twin-head pump is to be installed in a horizontal pipeline with horizontal pump shaft.

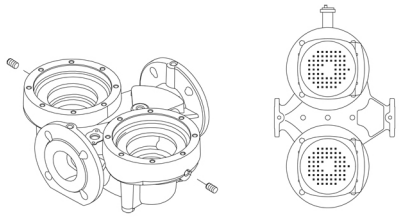

The flanges have tappings for mounting of pressure gauges.

The motor stool forms connection between the pump housing and the motor, and is equipped with a manual air vent screw for venting of the pump housing and the shaft seal chamber. The sealing between motor stool and pump housing is an O-ring.

The central part of the motor stool is provided with guards for protection against the shaft and coupling. Motor and pump shaft are connected via a shell coupling.

Motor

The motor is a totally enclosed, fan-cooled motor with principal dimensions to IEC and DIN standards. Electrical tolerances comply with IEC 60034.

The motor is flange-mounted with tapped-hole flange (FT).

Motor-mounting designation in accordance with IEC 60034-7: IM B 14, IM V 18 (Code I) / IM 3601, IM 3611 (Code II).

The motor efficiency is classified as IE3 in accordance with IEC 60034-30-1.

The motor does not incorporate motor protection and must be connected to a motor-protective circuit breaker which can be manually reset. The motor-protective circuit breaker must be set according to the rated current of the motor (I1/1).

Further product details

Technical data

Controls:

Frequency converter:	NONE

Liquid:

Pumped liquid:	Water
Liquid temperature range:	-25 .. 120 °C
Selected liquid temperature:	20 °C
Density:	998.2 kg/m³

Technical:

Pump speed on which pump data are based:	1440 rpm
Rated flow:	46.1 m³/h
Rated head:	2.8 m
Actual impeller diameter:	119 mm
Code for shaft seal:	BQQE
Curve tolerance:	ISO9906:2012 3B2

Materials:

Pump housing:	Cast iron

Company name:
Created by:
Phone:

Date: 10/09/2021

Qty.	Description	
		EN-GJL-250
		ASTM class 35
	Impeller:	Stainless steel
		EN 1.4301
		AISI 304
	Installation:	
	Range of ambient temperature:	-20 .. 55 °C
	Maximum operating pressure:	6 bar
	Max pressure at stated temp:	6 bar / 120 °C
	Type of connection:	DIN
	Size of connection:	DN 100
	Pressure rating for connection:	PN 6
	Port-to-port length:	450 mm
	Flange size for motor:	FT100
	Electrical data:	
	Motor type:	SIEMENS
	IE Efficiency class:	IE3
	Rated power - P2:	0.55 kW
	Mains frequency:	50 Hz
	Rated voltage:	3 x 220-240D/380-420Y V
	Rated current:	2.2/1.26 A
	Starting current:	590-590 %
	Cos phi - power factor:	0.78
	Rated speed:	1440 rpm
	Efficiency:	IE3 80,8%
	Motor efficiency at full load:	80.8-80.8 %
	Motor efficiency at 3/4 load:	81.1-81.1 %
	Motor efficiency at 1/2 load:	79.3-79.3 %
	Number of poles:	4
	Enclosure class (IEC 34-5):	IP55
	Insulation class (IEC 85):	F
	Motor No:	99900479
	Others:	
	Minimum efficiency index, MEI ≥:	0.45
	Net weight:	96.4 kg
	Gross weight:	118 kg
	Shipping volume:	0.39 m³

Company name:
Created by:
Phone:

Date: 10/09/2021

98958051 TPD 100-30/4 AI-F-A-BQQE-EX3 50 Hz

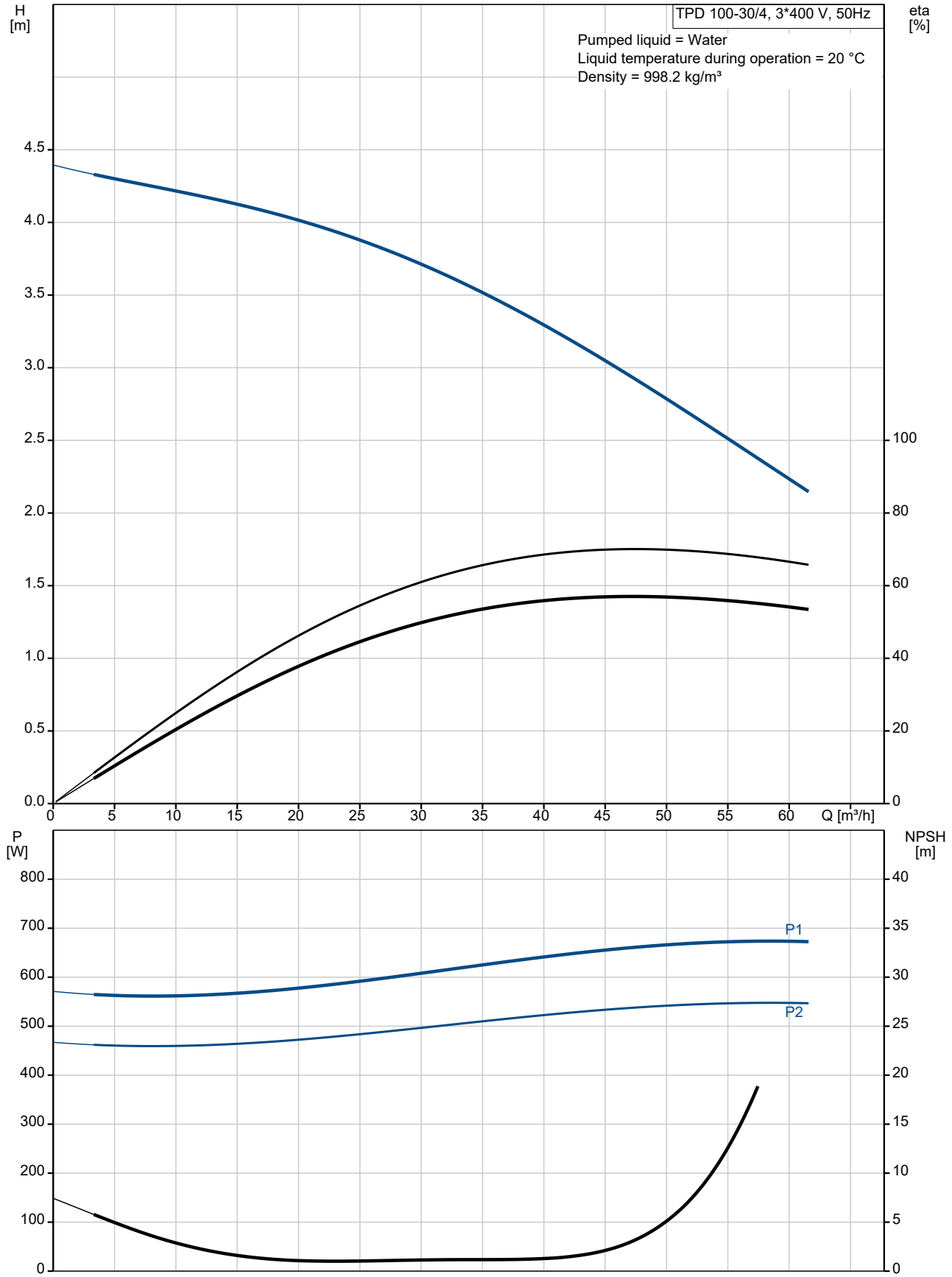

Company name:
Created by:
Phone:

Date: 10/09/2021

Description	Value
General information:	
Product name:	TPD 100-30/4 AI-F-A-BQQE-EX3
Product No:	98958051
EAN number:	5712604245187
Technical:	
Pump speed on which pump data are based:	1440 rpm
Rated flow:	46.1 m³/h
Rated head:	2.8 m
Maximum head:	30 dm
Actual impeller diameter:	119 mm
Code for shaft seal:	BQQE
Curve tolerance:	ISO9906:2012 3B2
Pump version:	AI
Materials:	
Pump housing:	Cast iron
Pump housing:	EN-GJL-250
Pump housing:	ASTM class 35
Impeller:	Stainless steel
Impeller:	EN 1.4301
Impeller:	AISI 304
Material code:	A
Installation:	
Range of ambient temperature:	-20 .. 55 °C
Maximum operating pressure:	6 bar
Max pressure at stated temp:	6 bar / 120 °C
Type of connection:	DIN
Size of connection:	DN 100
Pressure rating for connection:	PN 6
Port-to-port length:	450 mm
Flange size for motor:	FT100
Connect code:	F
Liquid:	
Pumped liquid:	Water
Liquid temperature range:	-25 .. 120 °C
Selected liquid temperature:	20 °C
Density:	998.2 kg/m³
Electrical data:	
Motor type:	SIEMENS
IE Efficiency class:	IE3
Rated power - P2:	0.55 kW
Mains frequency:	50 Hz
Rated voltage:	3 x 220-240D/380-420Y V
Rated current:	2.2/1.26 A
Starting current:	590-590 %
Cos phi - power factor:	0.78
Rated speed:	1440 rpm
Efficiency:	IE3 80,8%
Motor efficiency at full load:	80.8-80.8 %
Motor efficiency at 3/4 load:	81.1-81.1 %
Motor efficiency at 1/2 load:	79.3-79.3 %
Number of poles:	4
Enclosure class (IEC 34-5):	IP55
Insulation class (IEC 85):	F
Built-in motor protection:	NONE
Motor No:	99900479
Controls:	
Frequency converter:	NONE

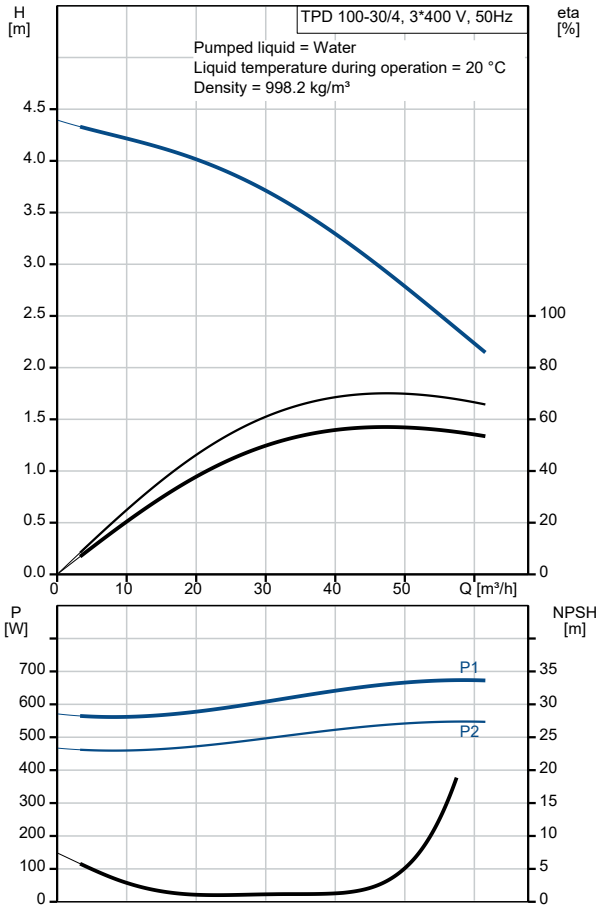

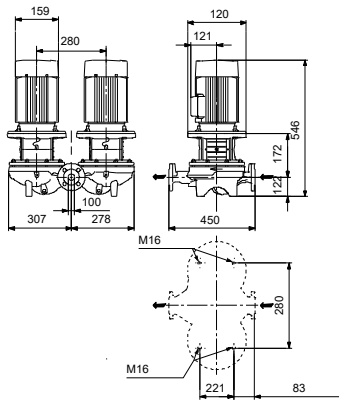

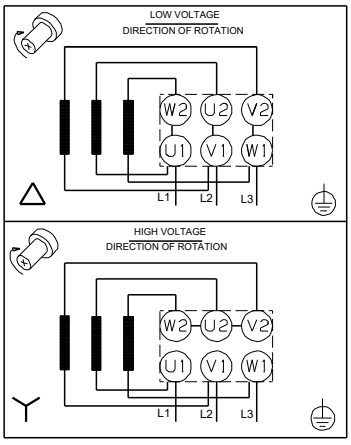

Company name:
Created by:
Phone:

Date: 10/09/2021

Description	Value
Others:	
Minimum efficiency index, MEI ≥:	0.45
Net weight:	96.4 kg
Gross weight:	118 kg
Shipping volume:	0.39 m³

Company name:
Created by:
Phone:

Date: 10/09/2021

98958051 TPD 100-30/4 AI-F-A-BQQE-EX3 50 Hz

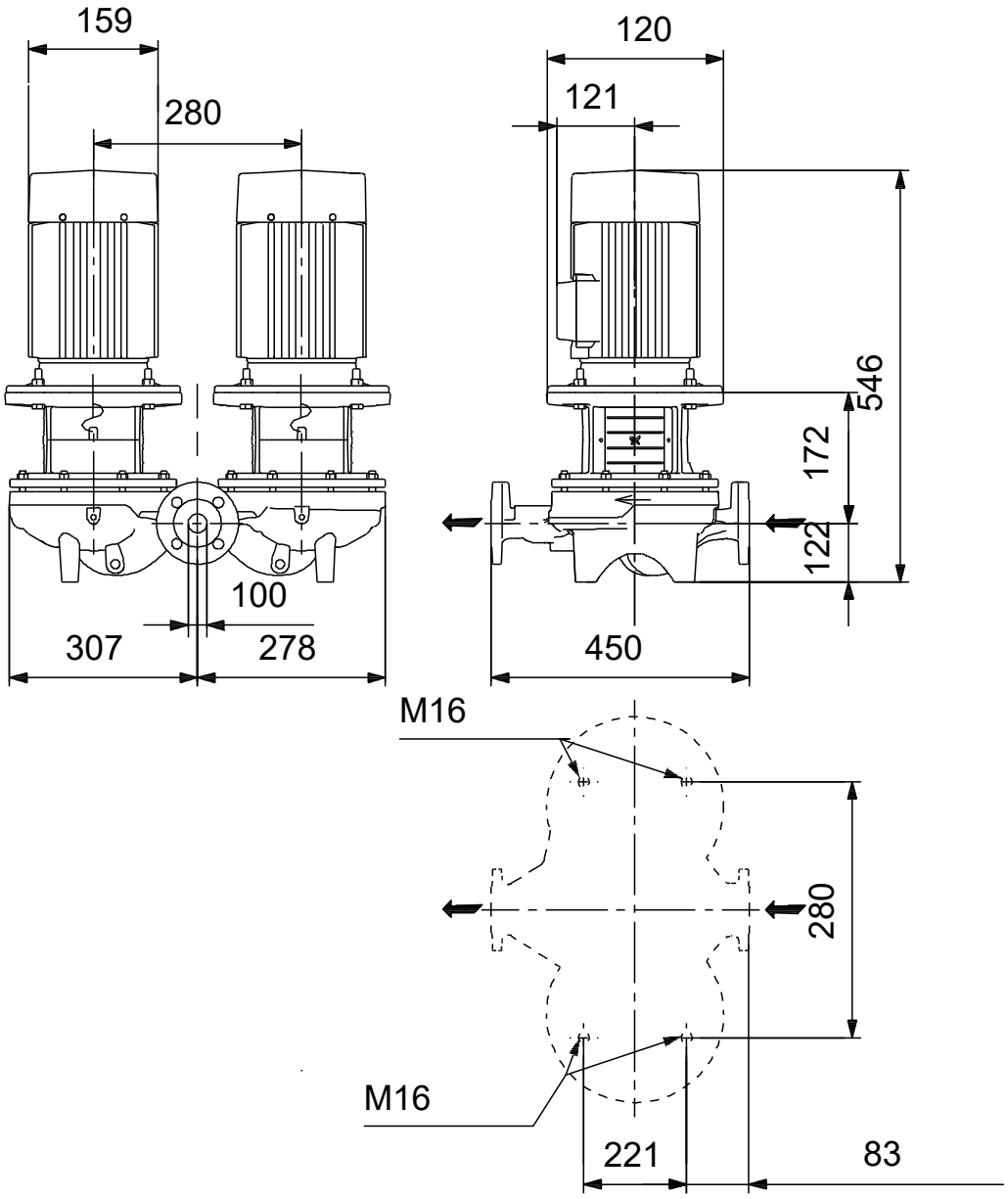

Note! All units are in [mm] unless others are stated.
Disclaimer: This simplified dimensional drawing does not show all details.

Company name:
Created by:
Phone:

Date: 10/09/2021

98958051 TPD 100-30/4 AI-F-A-BQQE-EX3 50 Hz

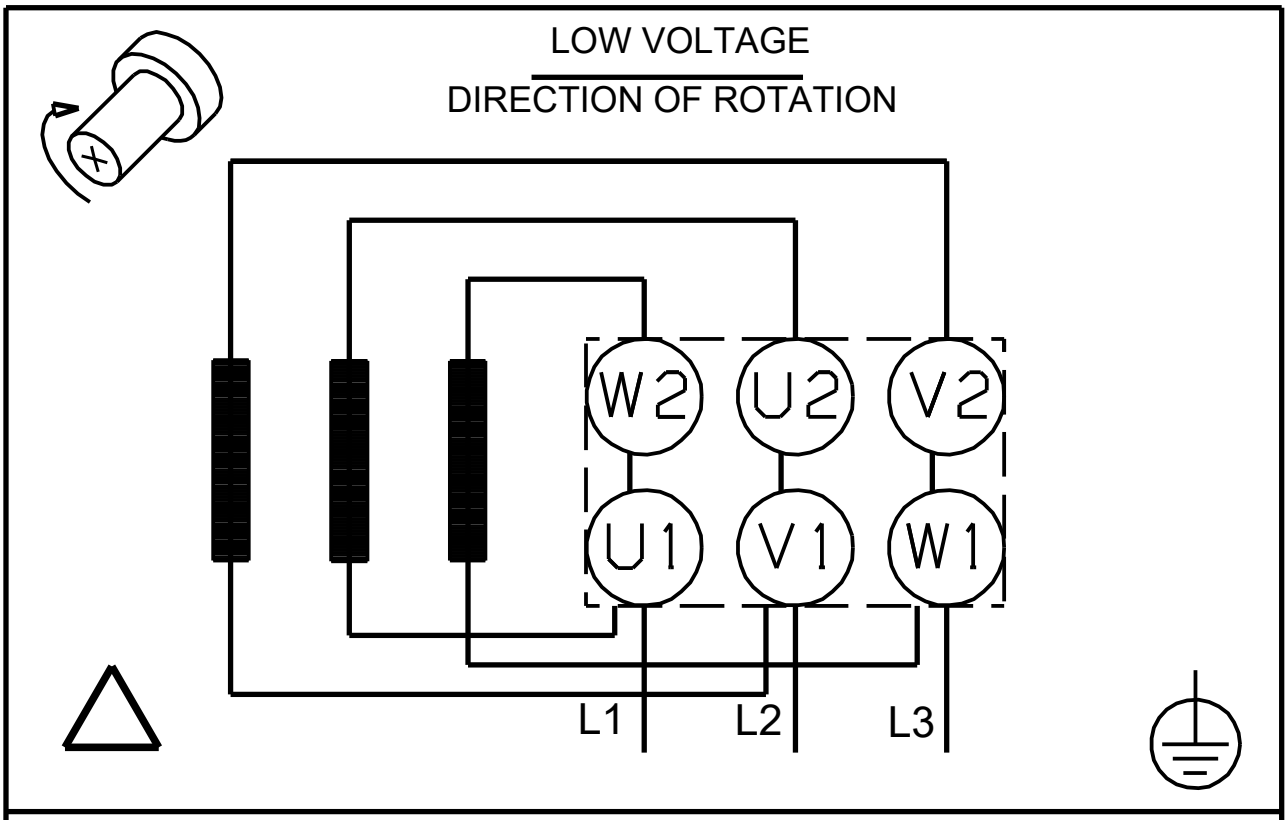

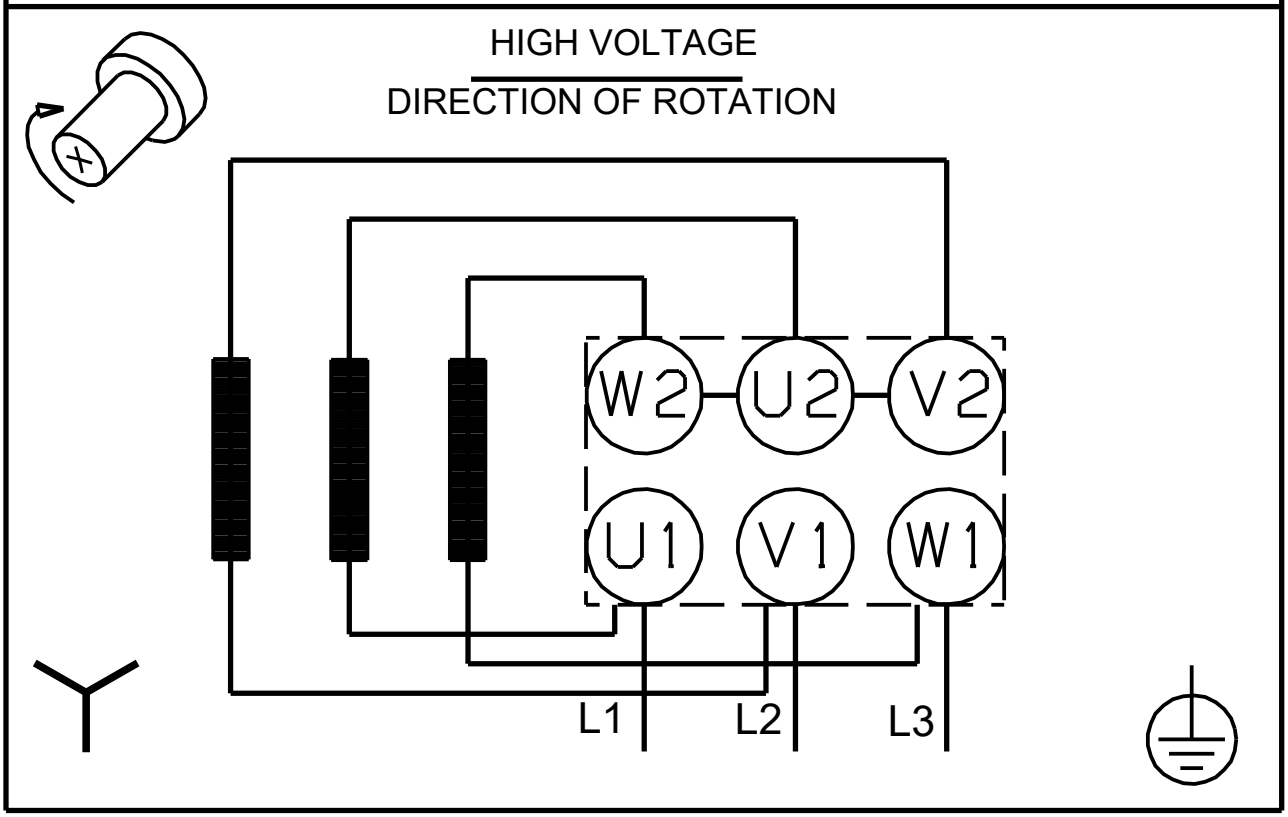

Note! All units are in [mm] unless others are stated.